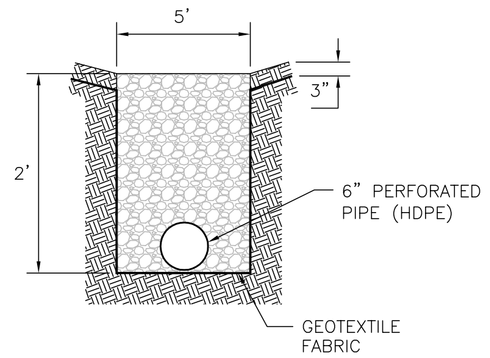

INFILTRATION TRENCH
NTS

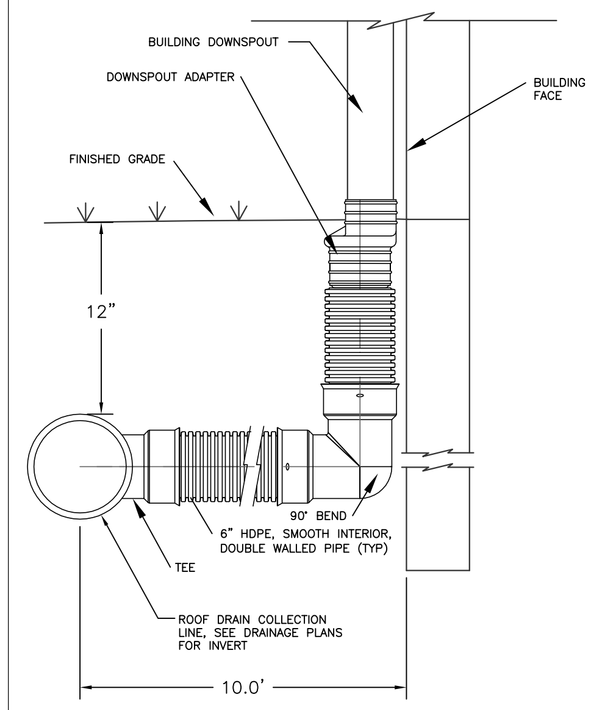

ROOF DRAIN–2

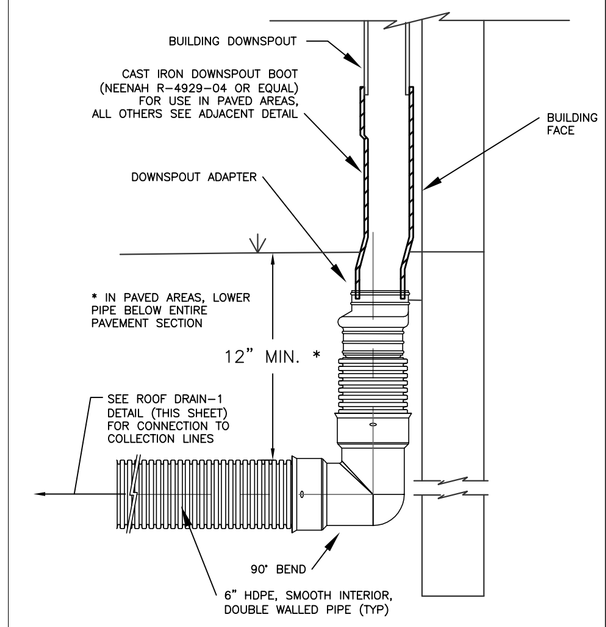

ROOF DRAIN–3: IN PAVED AREAS (NTS)

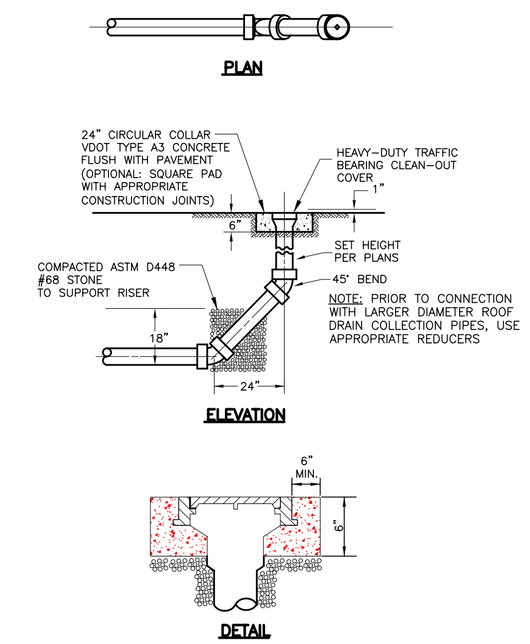

CLEANOUT (NTS)

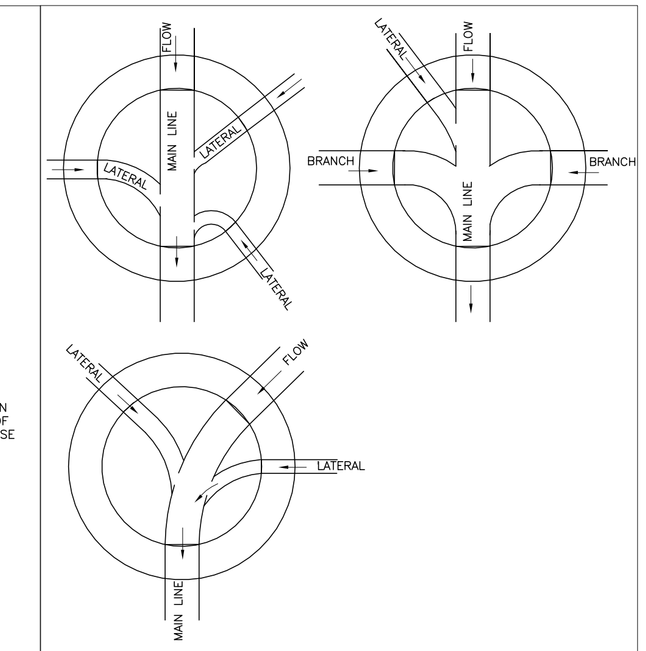

THE INVERT CHANNELS SHALL BE FORMED WITH CONCRETE AS SHOWN AND SHALL BE SMOOTH AND SEMI–CIRCULAR IN SHAPE, CONFORMING TO THE INSIDE OF THE ADJACENT SEWER SECTION. CHANGES IN THE DIRECTION OF FLOW SHALL BE MADE WITH A SMOOTH CURVE OF AS LARGE A RADIUS AS SIZE OF MANHOLE WILL PERMIT. SEE SPECIFICATIONS FOR FURTHER DETAIL.

MANHOLE INVERT CHANNELING

MH–4

THIS DETAIL APPLICABLE FOR DEPTHS LESS THAN 23 FEET. SEE PLANS FOR MODIFICATIONS IN DEEPER TRENCHES.

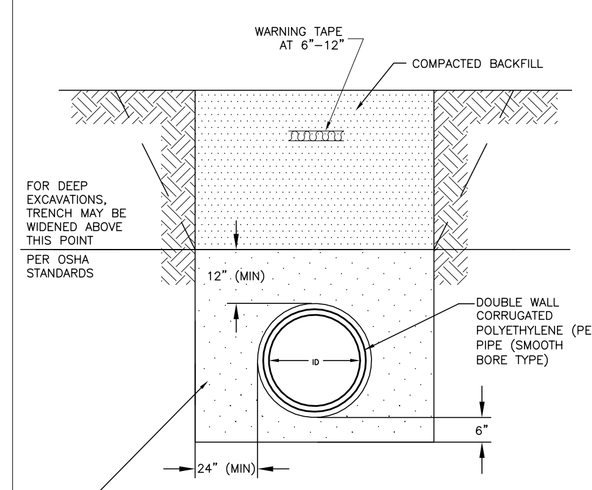

BACKFILL: CRUSHER RUN AGGREGATE SIZE NO 25 OR 26, FLOWABLE BACKFILL OR COMPACTED SOILS CONFORMING TO AASHTO M145; "THE CLASSIFICATION OF SOILS AND SOIL AGGREGATE, MIXTURES FOR HIGHWAY CONSTRUCTION PURPOSES." GROUP A–1, A–2–4, A–2–5, A–2–6 OR A–3 (GW, GP, SW, GM AND SM) ONLY.

POLYETHYLENE PIPE STORM SEWER TRENCH BED

TB–7

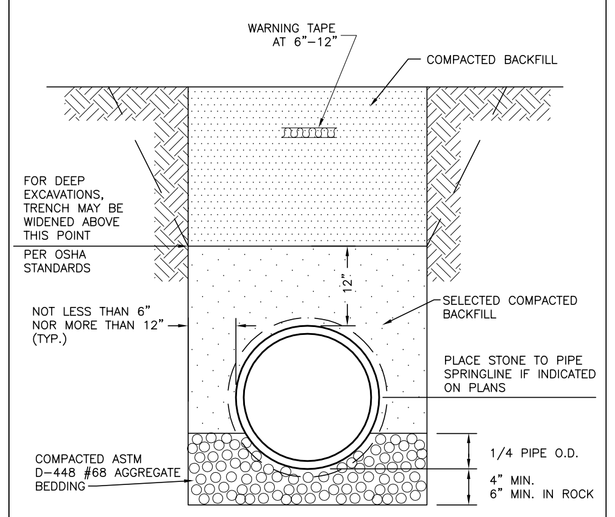

THIS DETAIL APPLICABLE FOR DEPTHS LESS THAN 14 FEET. SEE PLANS FOR MODIFICATIONS IN DEEPER TRENCHES.

STORM SEWER TRENCH BED

ANDERSON AND ASSOCIATES, Inc. Professional Design Services — Virginia, North Carolina, Tennessee, West Virginia

TB–2

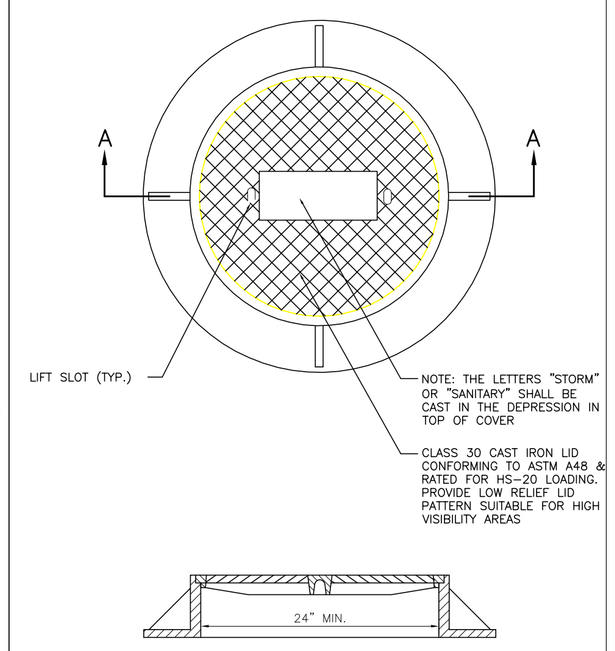

SECTION A–A

MANHOLE LID FOR USE IN CONCRETE PAVED AREAS

FC–9

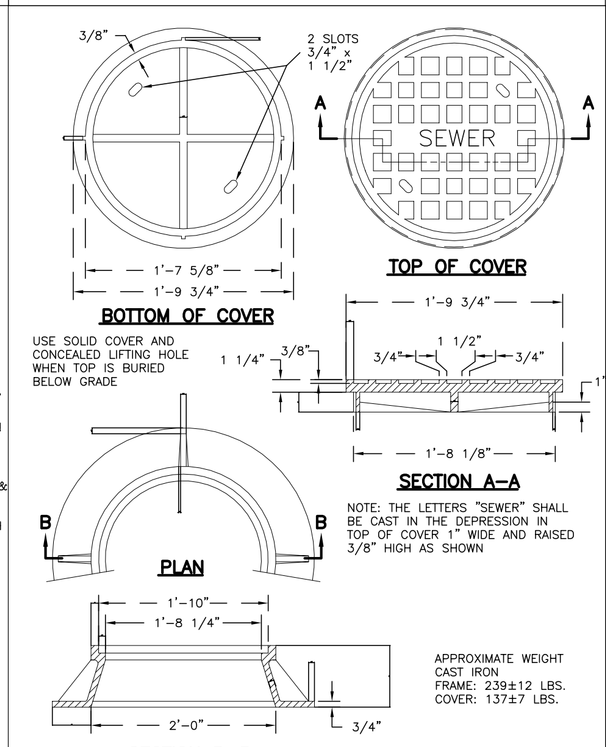

STANDARD MANHOLE FRAME & COVER

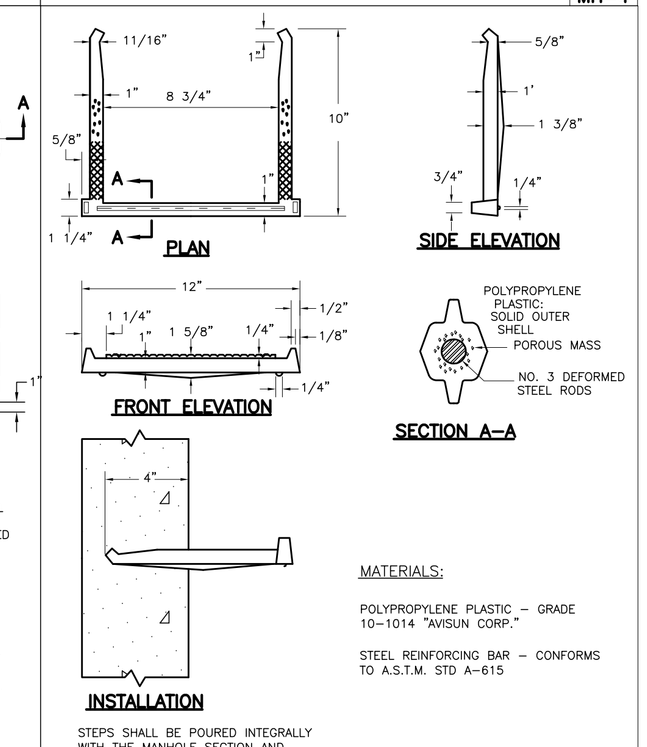

STANDARD MANHOLE STEP

COMMONWEALTH OF VIRGINIA
04 MAY 07
TREVOR M. KIMZEY
No. 036354
PROFESSIONAL ENGINEER

TOWN ENGINEER	DATE
TOWN PLANNER	DATE

ANDERSON & ASSOCIATES, INC.
Professional Design Services
www.andassoc.com
Virginia - North Carolina - Tennessee
100 Ardmore St.
Blacksburg, Va. 24060
540-552-5592

DATE	: 04 MAY 07
DESIGNED:	RJH
DRAWN	: MSM
CHECKED :	TMK
QA / QC	: MTC

REV. #	COMMENTS	DATE
----	----	----
----	----	----
----	----	----
----	----	----
----	----	----

FIRST & MAIN
PHASE 1
BLACKSBURG, VIRGINIA

GRADING & DRAINAGE DETAILS 1

DOCUMENT NO. **22559 – 110**
SHEET **C2.18**

Baker, Robbie / 5/3/2007 1:55 PM / u:\22\22559\22559eng\design\plans_lsc\22559_sheet_drainage_details.dwg