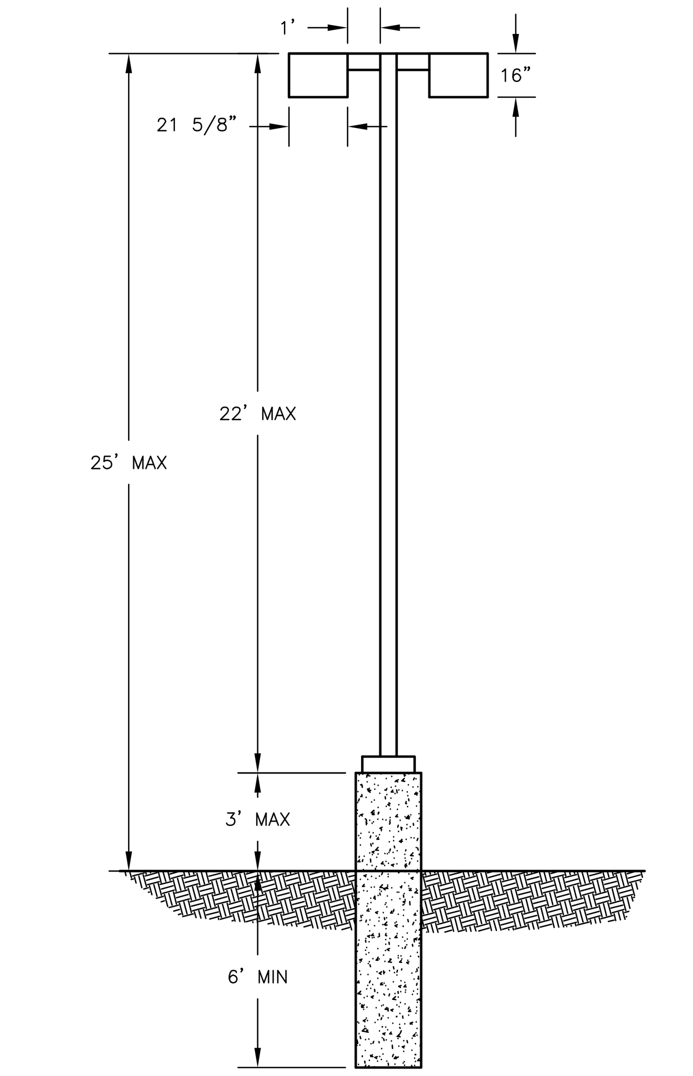

TYPICAL LIGHTING POLE DETAIL

SCALE: 1"=5'

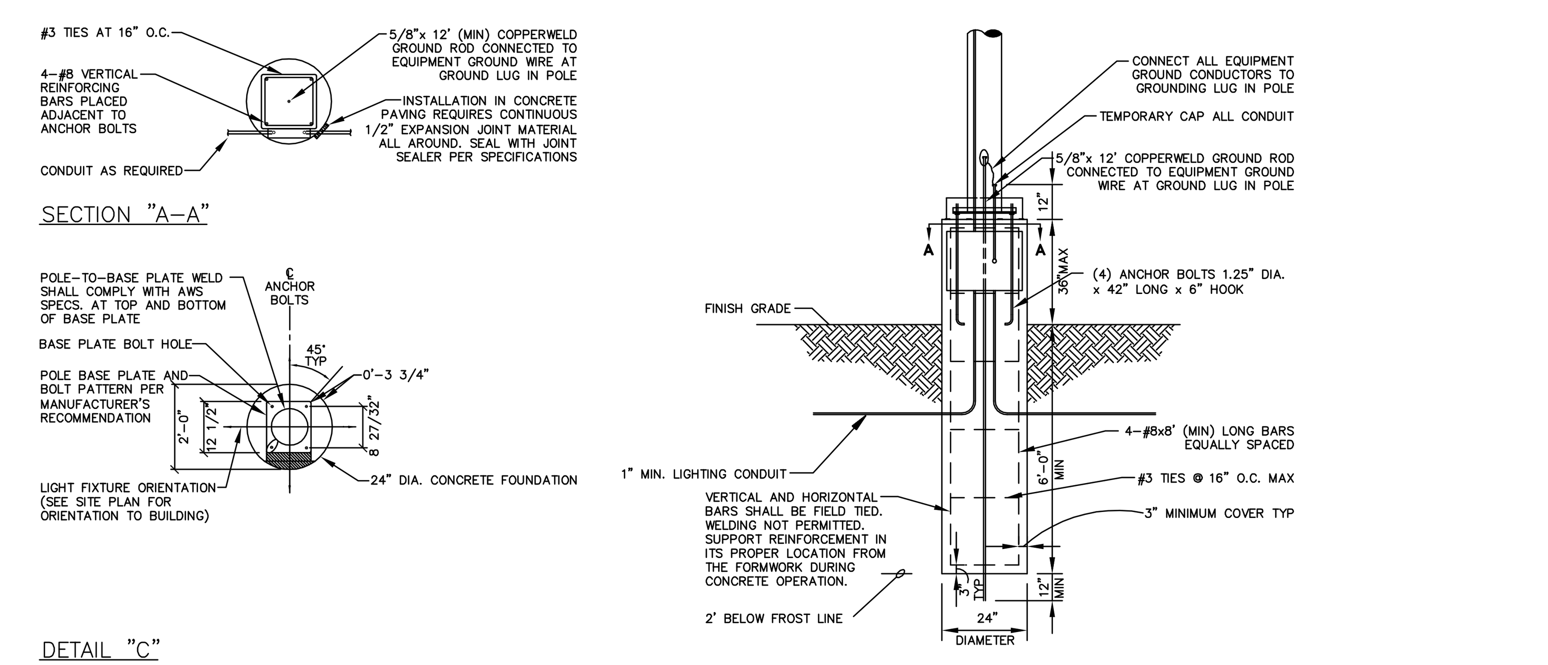

DETAIL "C"

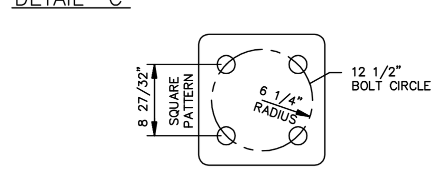

TYPICAL ANCHOR BOLT SPACING

NOTES:
1. 3500 PSI MIN. 28 DAY COMPRESSIVE STRENGTH CONCRETE WITH GRADE 60 REINFORCING STEEL
2. IF WATER IS PRESENT IN HOLE, REMOVE BEFORE POURING CONCRETE.
3. FOUNDATION EXCAVATION SHALL BE BY 24" AUGER IN UNDISTURBED OR PROPERLY COMPACTED FILL PER SPECIFICATIONS.
4. FOUNDATION SHALL HAVE A MINIMUM ALLOWABLE END BEARING OF 2000 PSF.
5. FOUNDATION HAS BEEN DESIGNED FOR A COHESIVE SOIL BASED ON A MINIMUM COHESIVE VALUE OF 1000 PSF.
6. FOUNDATION HAS BEEN DESIGNED FOR A GRANULAR SOIL BASED ON A MINIMUM LATERAL SOIL PRESSURE OF 1000 PSF, UTILIZING AASHTO FIGURE 1.8.2C(4) OF "EMBEDMENT OF POSTS WITH OVERTURNING LOADS".
7. ALL LIGHT POLE BASE FOUNDATIONS SHALL BE CAST-IN-PLACE. PRE-CAST LIGHT POLE BASE FOUNDATIONS ARE NOT ACCEPTABLE.

TYPICAL LIGHTING POLE BASE DETAIL

N.T.S.

WLS LIGHTING SYSTEMS

FV SERIES
VERTICAL LAMP FLAT GLASS LENS

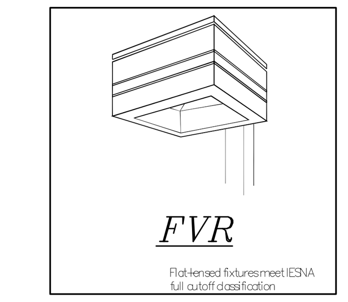

HOUSING The FV Series formed aluminum housing is finished to produce a clean, sharp appearance and ensures weather-tight construction. Available in 2 sizes: Medium (reduced envelope 400 Watt Lamp) and Reduced (reduced envelope 1000 Watt Lamp).

LENS/GASKET A flat tempered glass lens is sealed to the housing with an EPDM gasket, preventing entry of moisture and insects. Combined with the vertical burn feature, the flat glass lens provides high performance lighting.

TOP ACCESS Is secured by four captive stainless steel fasteners and provides ease of installation and servicing.

FINISHES Each fixture is finished with a baked-on polyester powder finishing process to give the fixture an exceptionally attractive appearance. Standard finish colors include bronze, buff, black, platinum, white and green. The polyester finish withstands extreme weather changes without cracking or peeling. Consult factory for available custom colors and pinstripe decal options.

REFLECTORS/DISTRIBUTION PATTERNS The FV Series fixture is available in four reflector systems and distribution patterns, all with vertical burn lamps: Type II (2), Type III (3), Type V (5), and Perimeter Forward Throw (FP). Reflectors are field-rotatable, enabling generous flexibility in distribution patterns without fixture movement.

LIGHT SOURCES Designed to operate with Pulse-Start Metal Halide, Super Metal Halide, Metal Halide, Metal Halide Reduced Envelope or High Pressure Sodium.

SOCKETS Porcelain mogul-base sockets with spring-reinforced contacts.

BALLAST Metal Halide, Super Metal Halide, and High Pressure Sodium feature a high-power factor CWA ballast, and are designed for -20 F operation.

BRACKETS Arm Mount: 5 1/2" x 2 1/2" x 12" length shipped standard. (An 8" bracket is available for single or D180 configurations, but must be ordered separately from Options column of the ordering chart.) A Round Pole Plate (RPP) is required for mounting to 3"-5" round poles. (See Options in Luminaire Ordering Information.) Pole Top: Cast aluminum mounting hub conceals the wiring compartment and mounting hardware (consisting of four 1 1/16" O.D. aluminum rods for medium fixtures and 7/8" O.D. aluminum rods for large fixtures, and high-strength grade-steel bolt with nylon insert and split lock washer for double locking.)

listed for wet locations.

DIMENSIONS

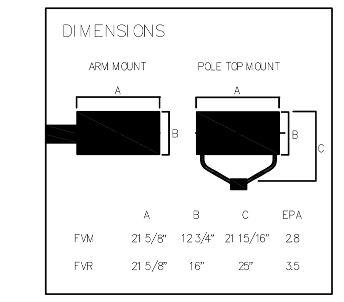

	A	B	C	EPA
FVM	21 5/8"	12 3/4"	21 15/16"	2.8
FVR	21 5/8"	16"	25"	3.5

MOUNTING BRACKETS

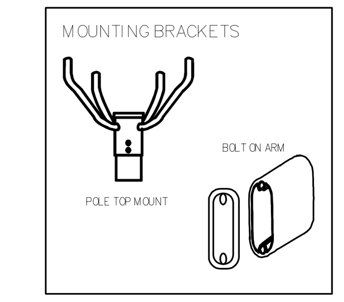

Approved By: ____
Project Name: ____
Location: ____
Date: ____

P.O. Box 100519 • Fort Worth, TX 76185
800.633.8711 • Fax: 817.735.4824 • www.wlslighting.com

---

748 SERIES
VERTICAL/HORIZONTAL

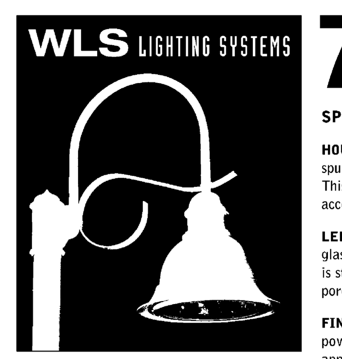

SPECIFICATIONS

HOUSING The 748 Series decorative housing is fabricated of heavy-duty spun and cast aluminum and finished to produce a clean, sharp appearance. This one-piece design ensures a weather-tight construction. The bottom access cover provides ease of installation and servicing.

LENS AND FRAME Lenses are impact resistant tempered glass. A flat glass lens is standard for the horizontal lamp option and a contoured lens is standard for the vertical lamp. Lens are sealed to the housing with a poron gasket to a one-piece lens frame.

FINISHES Fixtures are finished with a thermoset baked-on polyester powder finishing process, to give the fixture an exceptionally attractive appearance. The polyester finish withstands extreme weather change without cracking or peeling. Standard and custom colors available.

REFLECTORS/DISTRIBUTION PATTERNS Fixtures are equipped with a polished aluminum segmented reflector available in five distribution patterns. Vertical burn lamps: Type II (2), Type III (3), Type V (5), and Perimeter Forward Throw (FP).

LIGHT SOURCES Designed to operate up to 1000 Watt High Pressure Sodium and Metal Halide lamps

SOCKETS Porcelain mogul-base sockets feature spring-reinforced contacts to the housing. Rated to 600V.

BALLAST CWA or HPF regulating auto transformers. Available in Metal Halide or High Pressure Sodium. Starting temperature is -20 F for Metal Halide and -40 F for High Pressure Sodium. Maximum wattage is 1000W.

POLES Square or round poles are available in tapered or non-tapered. Also available as a wall mounted option.

ARMS A large selection of aluminum decorative arms are available for this unit. Two of the most popular are at the left. Please consult us for other options.

listed for wet locations.

DIMENSIONS

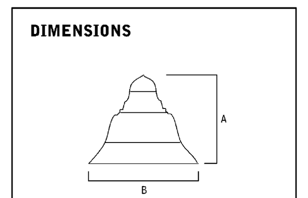

	A	B	EPA
748-S	22"	24 1/2"	2.1
748-M	22"	30"	2.6

DECORATIVE ARMS

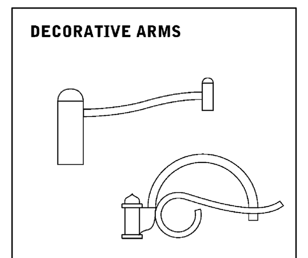

Approved By: ____
Project Name: ____
Location: ____
Date: ____

WLS LIGHTING SYSTEMS
MANUFACTURING SINCE 1969

P.O. Box 100519 Fort Worth, TX 76185
800.633.8711 Fax: 817.735.4824 www.wlslighting.com

---

748 SERIES
VERTICAL/HORIZONTAL

FIXTURE MOUNTING CONFIGURATIONS

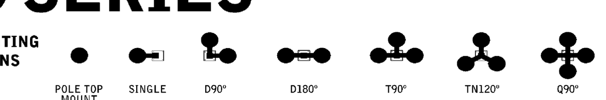

OPTICS

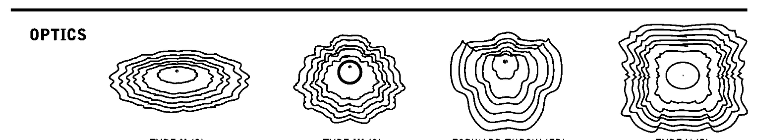

NOTE: Based on MH vertical burn. Consult factory for accurate optics.

ORDERING INFORMATION SELECT APPROPRIATE CHOICE FROM EACH COLUMN TO FORMULATE ORDER CODE. Refer to example below.

LUMINAIRE PREFIX	DISTRIBUTION	LAMP WATTAGE	LIGHT SOURCE	LENS	LINE VOLTAGE	LUMINAIRE FINISH	OPTIONS
748-S	2 - Type II 3 - Type III FP - Perimeter Forward Throw 5 - Type V	100W 175W 250W 400W	MH - Metal Halide SMH - Super Metal Halide PSMH - Pulse-Start Metal Halide HPS - High Pressure Sodium	CT - Contoured FG - Flat Glass (Clear Tempered Glass)	480V MT - Multi Tap[3] TT - Tri Tap[2]	BRZ - Bronze BLK - Black PLT - Platinum BUF - Buff WHT - White GRN - Green CC - Custom Color	LL - Less Lamp VL - Vertical Lamp GS - Glare Shield BKT-WM - Wall Mount Plate QR - Quartz Restrike PC - Photo Cell SF - Single Fusing DF - Double Fusing NO - No Options
748-M	2 - Type II 3 - Type III FP - Perimeter Forward Throw 5 - Type V	400W 1000W					

748-M (EXAMPLE ORDER)	5	1000	PSMH	FG	MT	BRZ	NO

ORDER:

WLS ____ ____ ____ ____ ____ ____ ____ ____

NOTE:
1. Voltage for 750W High Pressure Sodium must be specified.
2. Consult factory for international voltages. (120, 277, 347 Voltage)
3. MT - Multi Tap is shipped standard unless otherwise specified. (Multi Tap consists of 120V, 208V, 240V, and 277V. Multi Tap is pre-wired for highest voltage. Alternate voltages will require field re-wiring.)

Approved By: ____
Project Name: ____
Location: ____
Date: ____

WLS LIGHTING SYSTEMS
MANUFACTURING SINCE 1969

P.O. Box 100519 Fort Worth, TX 76185
800.633.8711 Fax: 817.735.4824 www.wlslighting.com

WLS LIGHTING SYSTEMS

RTS SERIES
ROUND TAPERED STEEL

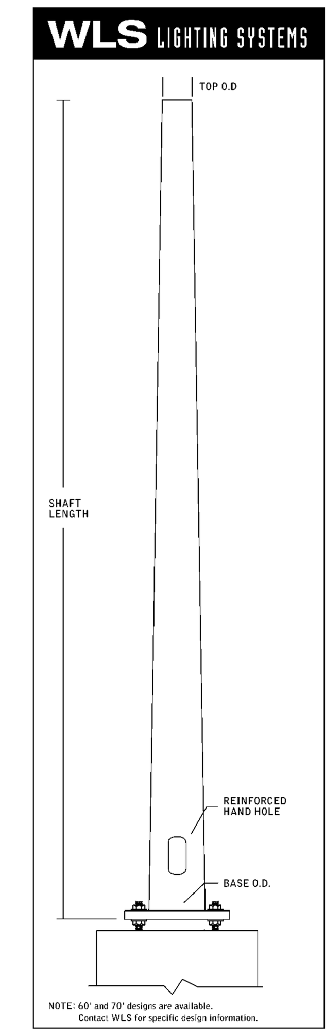

NOTE: 60' and 70' designs are available. Contact WLS for specific design information.

SPECIFICATIONS

STRUCTURAL DESIGN WLS poles are designed for the combined effects of both wind and dead load. The wind load effects have been analyzed with wind velocities ranging from 80 to 120 mph, with a 1.3 gust factor. Due to varying wind effects, height correction factors and drag coefficients have been applied to the entire structure.

POLE SHAFT Each pole shaft is made from a single ply sheet, which is formed into a tubular shape with one or more longitude welds; no welded splices are permitted. The material used for the pole sections meet the requirements of ASTM A572 or ASTM 595 Grade-A.

BASE PLATE Base plates are integrally welded to the bottom pole section of all anchor base-type assemblies with either a telescopic weld or a full-penetration weld with a back-up-bar. The material used for these plates will conform to either ASTM A36 or ASTM A572.

ANCHOR BOLTS All standard anchor bolts, nuts, and washers are not dipped, fully galvanized and meet the requirements of ASTM F1554, Grade 55.

HAND HOLES All hand holes are peripherally reinforced with flat bar which is integrally welded to the pole shaft. Each pole will have a 3"x 5" reinforced hand hole located 12" to 18" from the base of the pole. Cover plates are included with all hand holes and are attached to the pole with a back-bar and screw.

PROTECTIVE COATINGS All WLS poles are galvanized, powder coated, or a combination of the two. Galvanizing is in accordance with the requirements of ASTM A123. All poles are single dipped inside and out. In accordance with the USGA, no pole will be double dipped. Powder coated poles are cured at 400° Fahrenheit with urethane polyester powder covered throughout.

WELDING All welding is performed by AWS certified welders and all welds comply with the most recent edition of the AWS Structural Welding Code.

ANCHOR BOLT

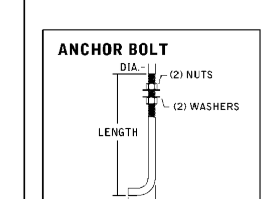

BASEPLATE

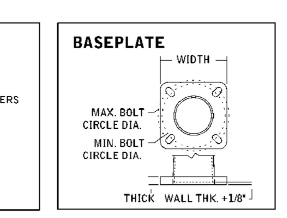

WLS LIGHTING SYSTEMS
MANUFACTURING SINCE 1969

P.O. Box 100519 Fort Worth, TX 76185
800.633.8711 Fax: 817.735.4824 www.wlslighting.com

RTS SERIES
ROUND TAPERED STEEL

ORDERING INFORMATION SELECT APPROPRIATE CHOICE FROM EACH COLUMN TO FORMULATE ORDER CODE. Refer to example below.

CATALOG NUMBER	BASE TYPE	STANDARD DRILLING PATTERNS	STANDARD TENONS	FINISH	STANDARD COLORS
WLS-RTS-20-6.3-11 WLS-RTS-25-7-11 WLS-RTS-30-8-11 WLS-RTS-35-8.4-11 WLS-RTS-40-9-11 WLS-RTS-40-9-7 WLS-RTS-50-10-7	AB - Anchor Base EM - Embedded LAB - Less Anchor Bolts	DM19 - 1 @ 90° DM28 - 2 @ 180° DM29 - 2 @ 90° DM32 - 3 @ 120° DM39 - 3 @ 90° DM49 - 4 @ 90°	TN238-2 3/8" O.D. x 5" Length TN278-2 7/8" O.D. x 5" Length TN312-3 1/2" O.D. x 5" Length	PC - Powder Coated GV - Galvanized GP - Galvanized & Powder Coated	BRZ - Bronze BLK - Black PLT - Platinum BUF - Buff WHT - White GRN - Green CC - Custom Color

(EXAMPLE ORDER)
WLS-RTS-35-8.4-11 (Pole Height, Base Diameter, Gauge) AB DM19 OR TN238 GV WH

ORDER:

WLS-RTS ____ ____ ____ ____ ____

CATALOG NUMBER	SHAFT LENGTH	SHAFT SIZE	BASE PLATE	BOLT CIRCLE	ANCHOR BOLT SIZE	WT.	80 MPH EPA*	90 MPH EPA*	100 MPH EPA*	110 MPH EPA*	120 MPH EPA*
WLS-RTS-20-6.3-11	20'	6.3" to 3.5"	11"x1"	11"[1]	1"x36"x4"	157	27	21.5	17.5	14.5	12
WLS-RTS-25-7-11	25'	7.0" to 3.5"	11"x1"	11"[1]	1"x36"x4"	204	24	19	15.5	12.5	10.5
WLS-RTS-30-8-11	30'	8.0" to 3.5"	11"x1"	11"[1]	1"x36"x4"	269	22	17.5	14	11.5	9.5
WLS-RTS-35-8.4-11	35'	8.4" to 3.5"	12.5"x1"	12"[2]	1"x36"x4"	316	21	16.5	13.5	11	9
WLS-RTS-40-9-11	39'	9.0" to 3.5"	12.5"x1"	12"[2]	1"x36"x4"	371	20.5	16	13	10.5	8.5
WLS-RTS-40-9-7	39'	9.0" to 3.5"	12.5"x1"	12"[2]	1.25"x42"x6"	554	37.5	30	24.5	20	16.5
WLS-RTS-50-10-7	50'	10.0" to 3.5"	14.5"x1.25"	14"[3]	1.25"x42"x6"	727	27.5	21.5	17	14	11

*1.3 gust factor [1]Slotted 10.5"-11.5" [2]Soltted 11.5"-12.5" [3]Slotted 13.5"-14.5"

POLE SPECIFICATION CRITERIA:

1. POLE HEIGHT – The pole height will be determined by the lighting requirements as specified by the project designer. These lighting requirements will cause variance in the pole height, which is dependent upon fixture types, lighting level and uniformity requirements.

2. POLE DUTY RATING – The pole duty rating should be determined by comparing the system EPA and weight with the EPA and weight capacities listed in the table above. The values detailed in this table reflect the maximum capacities of the respective poles and are based upon a loading centroid located at the top of the pole.

3. POLE BASE – The pole base (Anchor Bolt or Embedded) is typically determined by the project specifications.

4. WIND VELOCITY – The wind velocity shall be determined from either the project specifications or the wind velocity map. This wind velocity map is based upon a 50-year mean recurrence interval. The wind values shown on this map represent wind velocities at 30 feet above the ground. When a project location is sited between adjacent wind zones, the wind zone with the greater wind velocity should be used. Unusual wind conditions may exist around mountainous areas or locations with unique terrain. Special design consideration should be given to such areas.

5. EPA – The EPA (Effective Projected Area) of the system should be computed by summing all of the EPA's of the external appurtenances, which are mounted on the pole. EPA values for WLS fixtures can be found on the appropriate product sheet located in this catalog.

6. WEIGHT – The weight of the system should be computed by summing all of the weights of the external appurtenances mounted on the pole. Weights of fixtures and brackets can be determined from the appropriate lighting fixture manufacturer.

Approved By: ____
Project Name: ____
Location: ____
Date: ____

WLS LIGHTING SYSTEMS
MANUFACTURING SINCE 1969

P.O. Box 100519 Fort Worth, TX 76185
800.633.8711 Fax: 817.735.4824 www.wlslighting.com

TOWN ENGINEER	DATE
TOWN PLANNER	DATE

ANDERSON & ASSOCIATES, INC.
Professional Design Services
www.andassoc.com
Virginia - North Carolina - Tennessee
100 Ardmore St.
Blacksburg, Va. 24060
540-552-5592

DATE	: 24 JUL 07
DESIGNED	: WLS
DRAWN	: ----
CHECKED	: ----
QA / QC	: MTC

REV. #	COMMENTS	DATE
----	----	----
----	----	----
----	----	----
----	----	----
----	----	----

FIRST & MAIN
PHASE 1
BLACKSBURG, VIRGINIA

EXTERIOR LIGHTING DETAILS

DOCUMENT NO. 22559 – 210
SHEET C0.08

Howard, Rick / 7/23/2007 2:58 PM / u:\22\22559\22559eng\design\plans_lsc\22559_sheet_lighting_plan.dwg