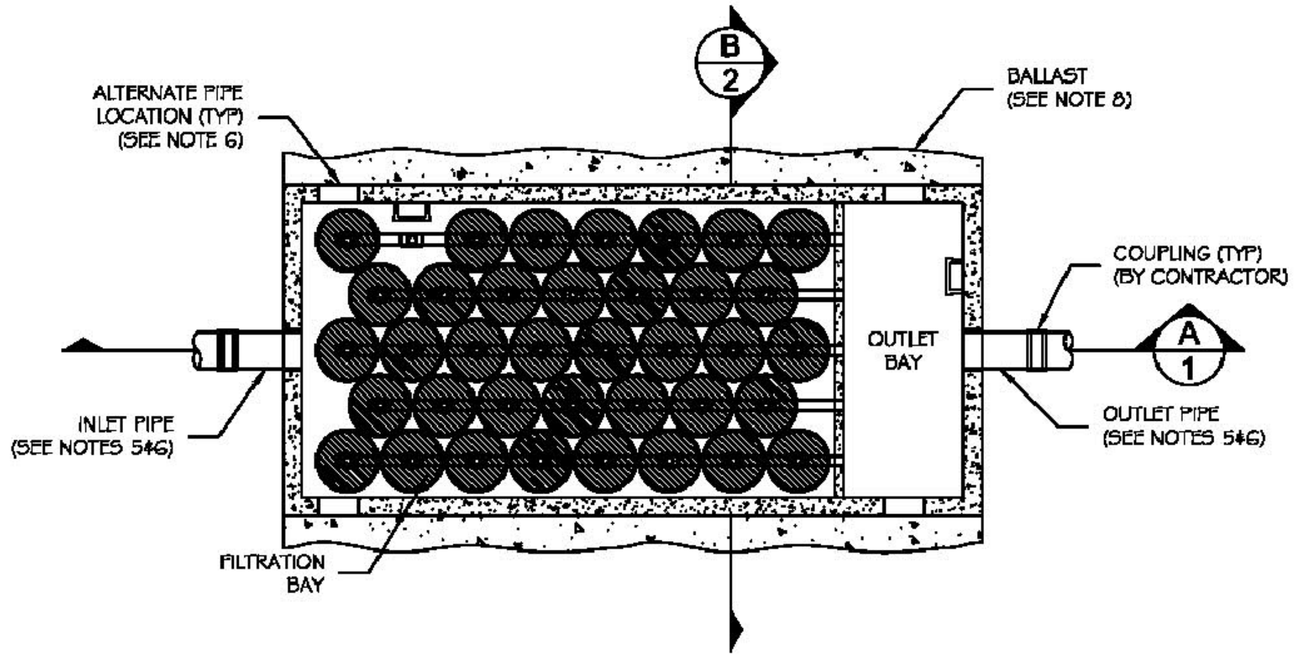

8' x 18' STORMFILTER - PLAN VIEW (1/1)

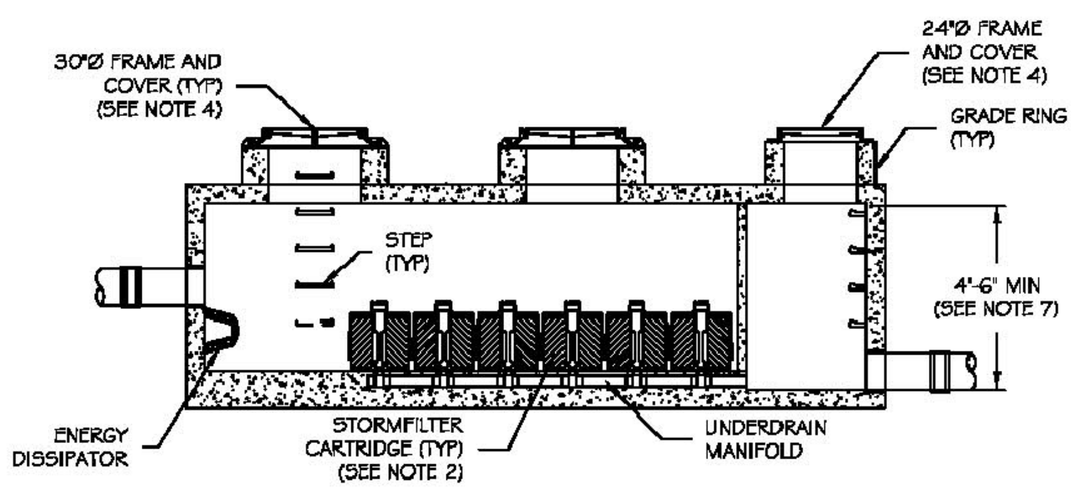

8' x 18' STORMFILTER - SECTION VIEW (A/1)

THE STORMWATER MANAGEMENT Stormfilter® U.S. PATENT No. 5,322,629, No. 5,707,527, No. 6,027,639 No. 6,649,045, No. 5,624,576, AND OTHER U.S. AND FOREIGN PATENTS PENDING

©2006 CONTECH Stormwater Solutions

CONTECH® STORMWATER SOLUTIONS™
contechstormwater.com

8' x 18' PRECAST STORMFILTER
PLAN AND SECTION VIEWS
STANDARD DETAIL

DRAWING 1 (1/2)

DATE: 12/14/06 | SCALE: NONE | FILE NAME: SF818-PC-MDA-FHB-NIB-DTL | DRAWN: MJW | CHECKED: ARG

GENERAL NOTES

1) STORMFILTER BY STORMWATER360; WEST: PORTLAND, OREGON (800) 548-4667; EAST: SCARBOROUGH, ME (877) 907-8676; MID-ATLANTIC: ELKRIDGE, MD (866) 740-3318.
2) FILTER CARTRIDGE(S) TO BE SIPHON-ACTUATED AND SELF-CLEANING. STANDARD DETAIL DRAWING SHOWS MAXIMUM NUMBER OF CARTRIDGES. ACTUAL NUMBER REQUIRED TO BE SPECIFIED ON SITE PLANS OR IN DATA TABLE BELOW.
3) PRECAST VAULT TO BE CONSTRUCTED IN ACCORDANCE WITH ASTM C857 AND C858. DETAIL DRAWING REFLECTS DESIGN INTENT ONLY. ACTUAL DIMENSIONS AND CONFIGURATION OF STRUCTURE WILL BE SHOWN ON PRODUCTION SHOP DRAWING.
4) STRUCTURE AND ACCESS COVERS TO MEET AASHTO H-20 LOAD RATING.
5) STORMFILTER REQUIRES 2.3 FEET OF DROP FROM INLET TO OUTLET. IF LESS DROP IS AVAILABLE, CONTACT STORMWATER360.
6) INLET AND OUTLET PIPING TO BE SPECIFIED BY ENGINEER AND PROVIDED BY CONTRACTOR. PRECAST STORMFILTER VAULT EQUIPPED WITH EITHER KNOCKOUTS OR CAST-IN BOOT CONNECTIONS AT INLET AND OUTLET LOCATIONS.
7) PROVIDE MINIMUM CLEARANCE FOR MAINTENANCE ACCESS. IF A SHALLOWER SYSTEM IS REQUIRED, CONTACT STORMWATER360 FOR OTHER OPTIONS.
8) ANTI-FLOTATION BALLAST TO BE SPECIFIED BY ENGINEER AND PROVIDED BY CONTRACTOR, IF REQUIRED. BALLAST TO BE SET ALONG ENTIRE LENGTH OF BOTH SIDES OF THE STRUCTURE.
9) ALL STORMFILTERS REQUIRE REGULAR MAINTENANCE. REFER TO OPERATION AND MAINTENANCE GUIDELINES FOR MORE INFORMATION.

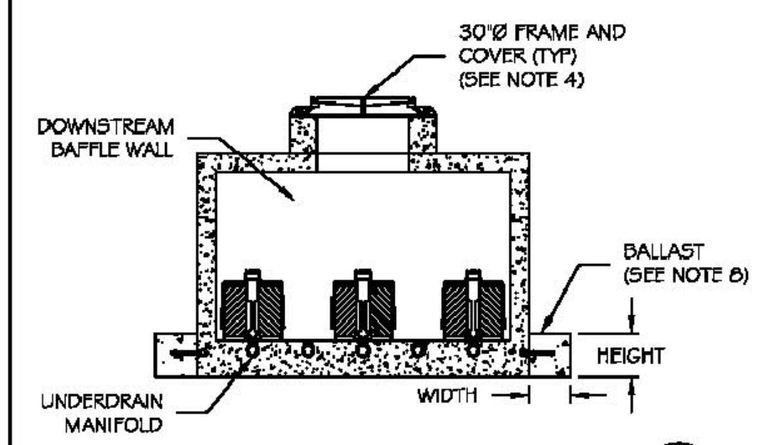

8' x 18' STORMFILTER - SECTION VIEW (B/2)

8' x 18' PRECAST STORMFILTER DATA

STRUCTURE ID	1S
WATER QUALITY FLOW RATE (cfs)	0.62
PEAK FLOW RATE (cfs)	XX
RETURN PERIOD OF PEAK FLOW (yrs)	XX
# OF CARTRIDGES REQUIRED	37
CARTRIDGE FLOW RATE (15 OR 7.5 gpm)	7.5
MEDIA TYPE (CSF, PERLITE, ZPG)	ZPG

PIPE DATA:	I.E.	MATERIAL	DIAMETER
INLET PIPE #1	XXX.XX'	XXX	XX"
INLET PIPE #2	XXX.XX'	XXX	XX"
OUTLET PIPE	XXX.XX'	XXX	XX"

RIM

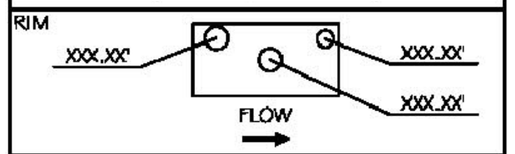

ANTI-FLOTATION BALLAST	WIDTH	HEIGHT
	XX"	XX"

NOTES/SPECIAL REQUIREMENTS:

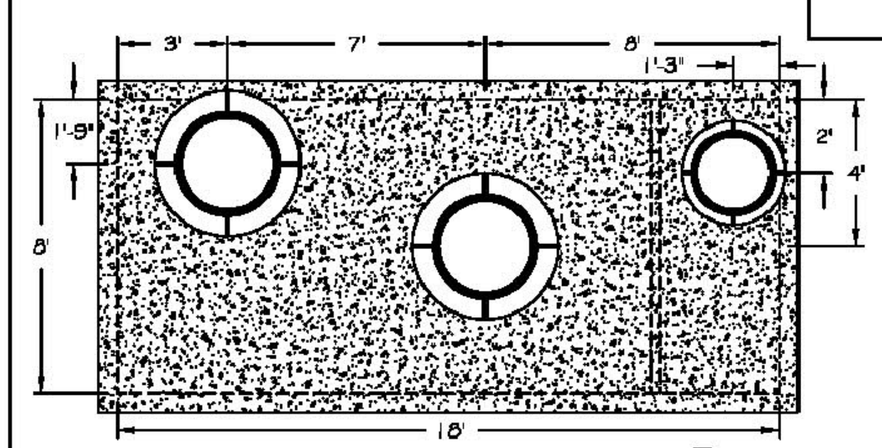

8' x 18' STORMFILTER - TOP VIEW (1/2)

THE STORMWATER MANAGEMENT Stormfilter® U.S. PATENT No. 5,322,629, No. 5,707,527, No. 6,027,639 No. 6,649,045, No. 5,624,576, AND OTHER U.S. AND FOREIGN PATENTS PENDING

©2006 CONTECH Stormwater Solutions

CONTECH® STORMWATER SOLUTIONS™
contechstormwater.com

8' x 18' PRECAST STORMFILTER
TOP AND SECTION VIEWS, NOTES AND DATA
STANDARD DETAIL

DRAWING 2 (2/2)

DATE: 12/14/06 | SCALE: NONE | FILE NAME: SF818-PC-MDA-FHB-NIB-DTL | DRAWN: MJW | CHECKED: ARG

TOWN ENGINEER	DATE
TOWN PLANNER	DATE

ANDERSON & ASSOCIATES, INC.
Professional Design Services
www.andassoc.com
Virginia - North Carolina - Tennessee
100 Ardmore St.
Blacksburg, Va. 24060
540-552-5592

DATE	24 JUL 07
DESIGNED:	CONTECH
DRAWN	CONTECH
CHECKED	----
QA / QC	MTC

REV. #	COMMENTS	DATE
----	----	----
----	----	----
----	----	----
----	----	----
----	----	----

FIRST & MAIN
PHASE 1
BLACKSBURG, VIRGINIA

GRADING & DRAINAGE DETAILS 3

DOCUMENT NO. 22559 – 210
SHEET C2.20

Evans, Katie / 7/23/2007 2:43 PM / u:\22\22559\22559eng\design\calcs_lsc\swm\swm\dwg\phase i & ii\22559-sheet-swm-details2.dwg