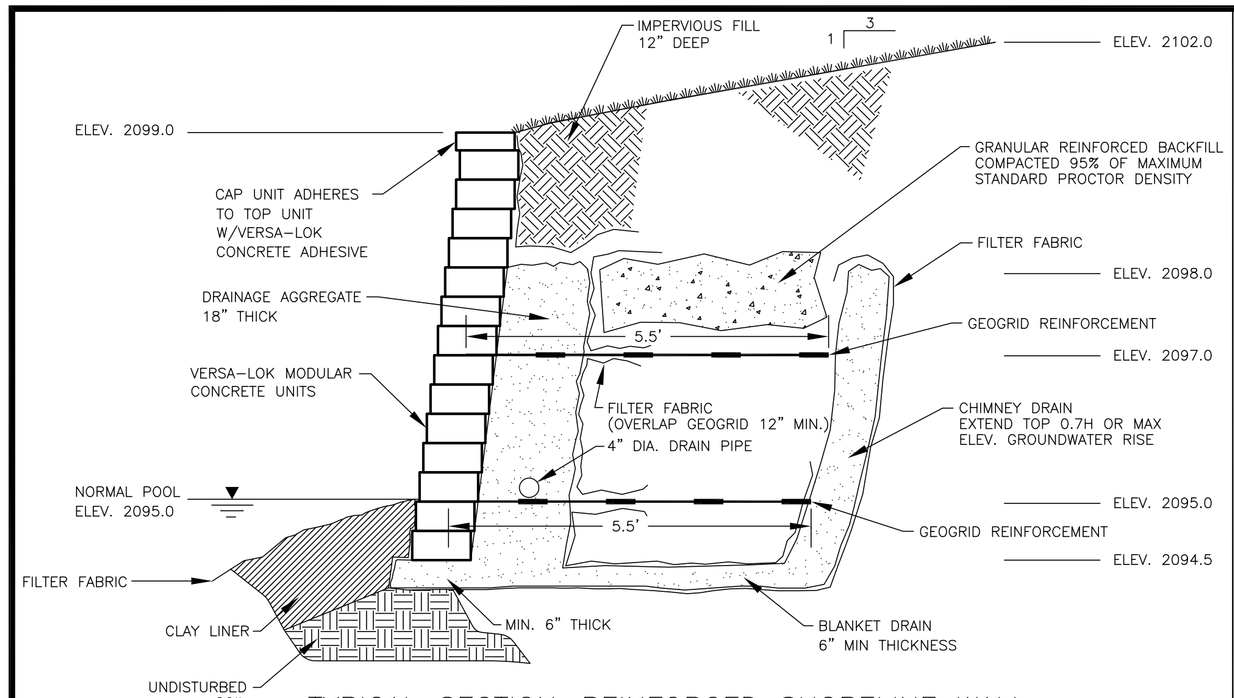

TYPICAL SECTION–REINFORCED SHORELINE WALL

WITH BLANKET AND CHIMNEY DRAIN
SCALE: NONE

LINTEL NOTES:
1. FINAL BEAM SIZE, REINFORCEMENT, AND CONFIGURATION TO BE DESIGNED BY PROJECT ENGINEER
2. LINTEL BEAMS SHALL BE PRECAST WITH MINIMUM 7 DAYS CURE
3. HEIGHT OF BEAM SHALL CORRESPOND TO HEIGHT OF MODULAR UNIT(S)
4. PLACEMENT OF LINTEL BEAMS SHALL BE CONSISTANT WITH THE PLACEMENT OF THE OUTFALL PIPE
5. INSTALL OUTFALL PIPE PRIOR TO CONSTRUCTION OF WALL ABOVE
6. OUTFALL PIPE TO EXTEND BEYOND BASE COURSE OF WALL NO LESS THAN 6"
7. GEOTEXTILE FABRIC SHALL BE INSTALLED AROUND PIPE OPENING
8. LINTEL TO EXTEND MINIMUM 18" EITHER SIDE OF OPENING

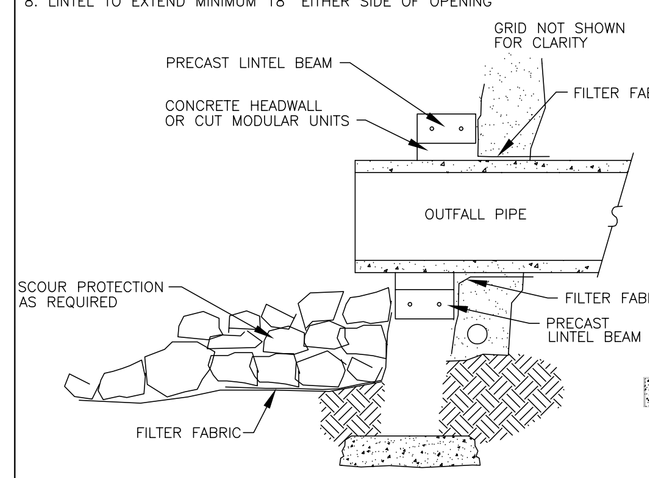

WALL W/ PIPE PENETRATION

SECTION
SCALE: NONE

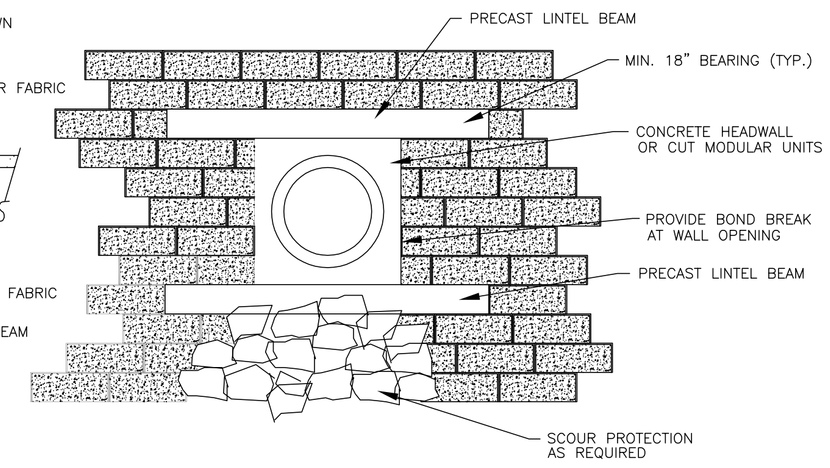

WALL W/ PIPE PENETRATION

PROFILE
SCALE: NONE

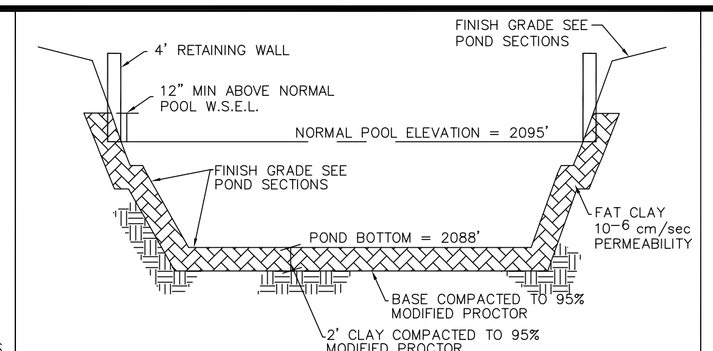

NOTES:
1. CONTRACTOR SHALL DEWATER AS NECESSARY TO INSTALL CLAY LINER.
2. A GEOTECHNICIAN SHALL OVERSEE AND PERFORM COMPACTION TESTING DURING THE PLACEMENT OF THE LINER. THE CONTRACTOR SHALL PROVIDE TO THE TOWN, A PROCTOR CURVE SHOWING THE DENSITY/MOISTURE RELATIONSHIP OF THE CLAY FOR COMPACTION.
3. EXCAVATE TO THE NECESSARY ELEVATION TO ACHIEVE FINAL POND ELEVATIONS AFTER THE PLACEMENT AND COMPACTION OF THE CLAY LINER.
4. CLAY SHALL BE LOWERED AS NECESSARY UNDER RIP-RAP AND STONE OUTLET PROTECTION.

CLAY LINER DETAIL

POND A
N.T.S.

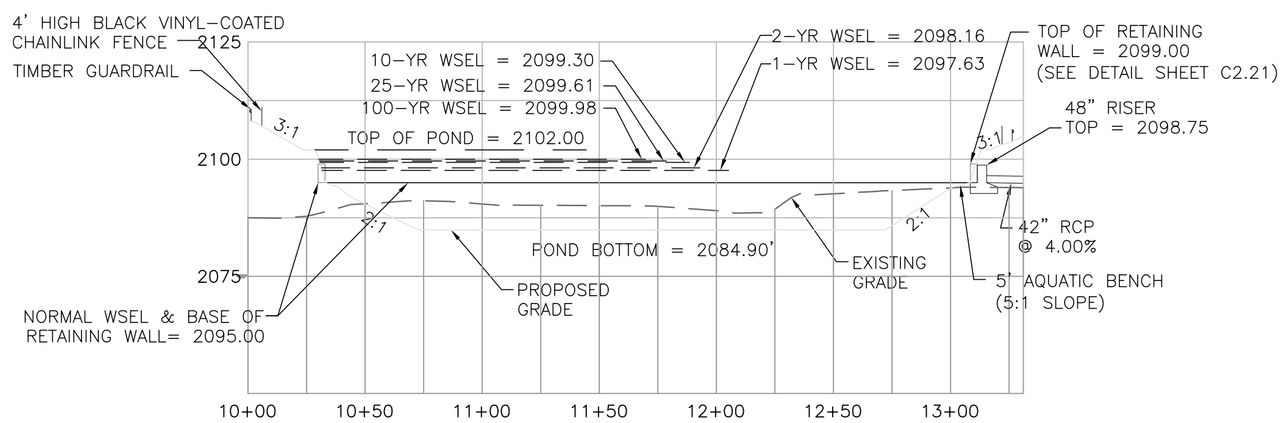

POND A
SECTION A1–A1
SCALE: HORIZ. 1"=50', VERT. 1"=25'

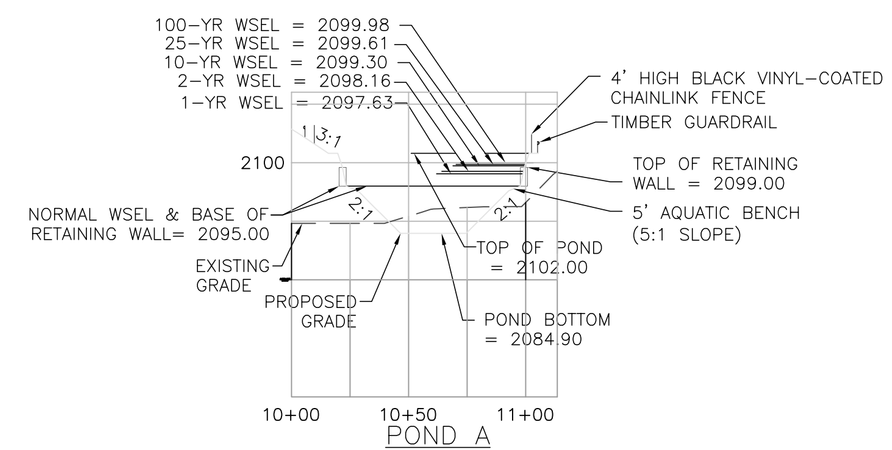

POND A
SECTION A2–A2
SCALE: HORIZ. 1"=50', VERT. 1"=25'

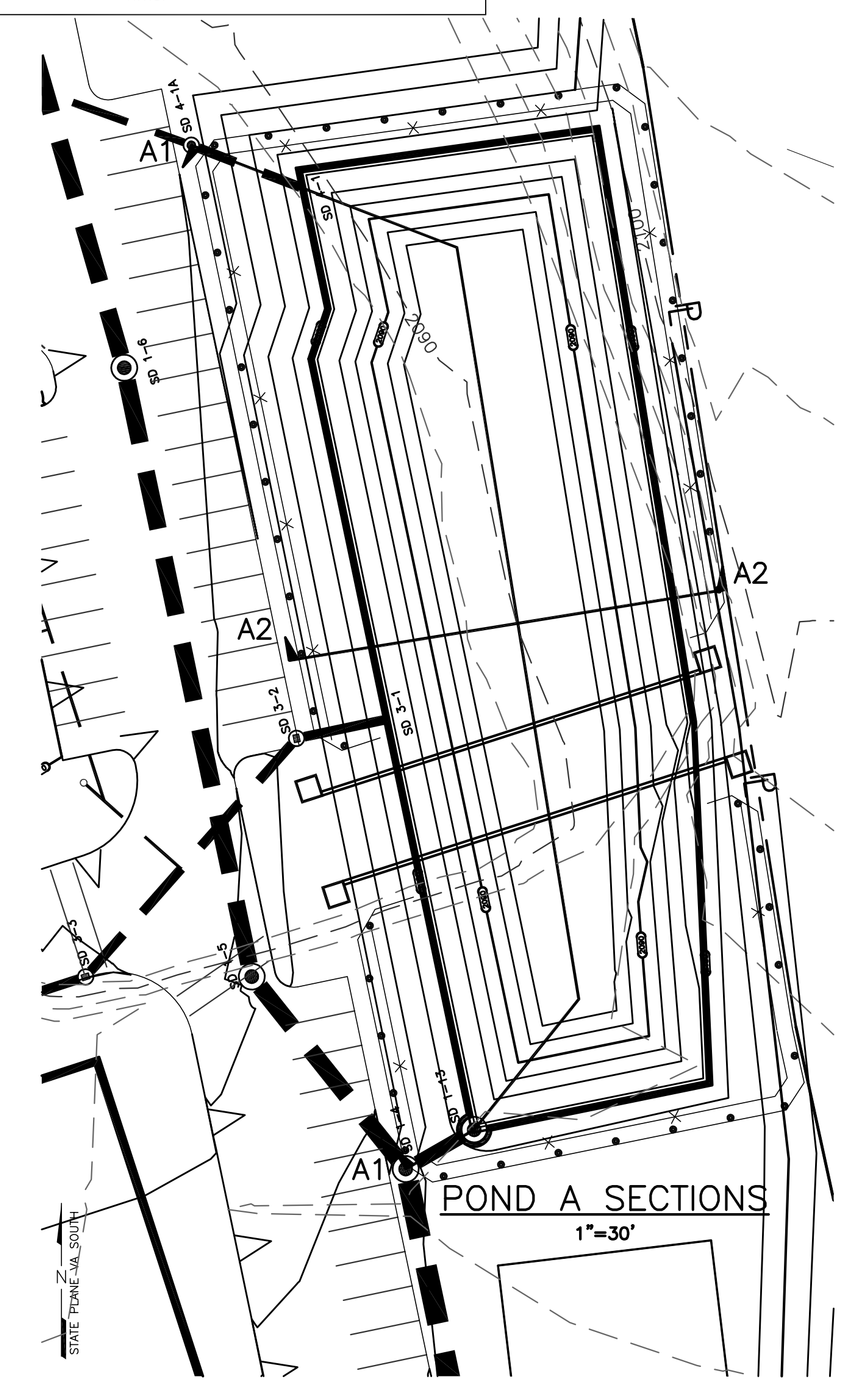

Water Quality Orifice Calculations

	Drainage Area	1-yr 24-hr Rainfall Depth	Composite CN	Tc	Channel Erosion Runoff Depth	Vol. for Channel Erosion	60% of Channel Eros. Vol	Actual Channel Eros. Vol	Channel Erosion Vol. Elev.	Pond Bottom	Head	Discharge, Q	Max Q	Required WQ Orifice Dia.*		Actual Dia.	Actual Release Time
Pond #	ac	in		min	in	ac-ft	ac-ft	ac-ft	ft	ft	ft	cfs	cfs	ft	in	in.	hrs
Pond A	18.39	2.28	92	31.4	1.51	2.31	1.39	1.39	2095.00	2088.00	7.000	0.560	1.120	0.33	4.01	**4.0**	30.2

* Required orifice based on 30-hour release and maximum head (for release of the 1-yr, 24hr storm event)
** Max Q = 2 * Q

1-yr 24-hr Rainfall depth for Blacksburg = 2.28 in.

OUTLET STRUCTURE AND WALL DETAIL

NOT TO SCALE

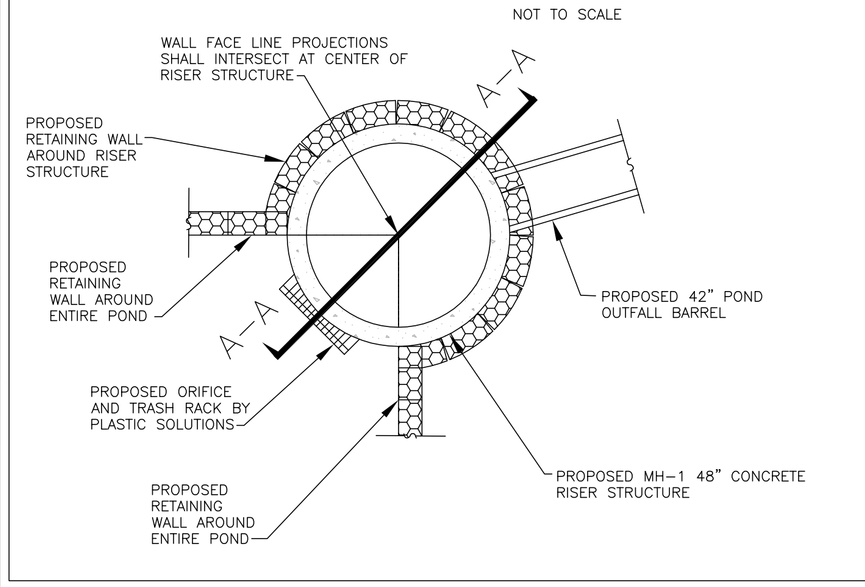

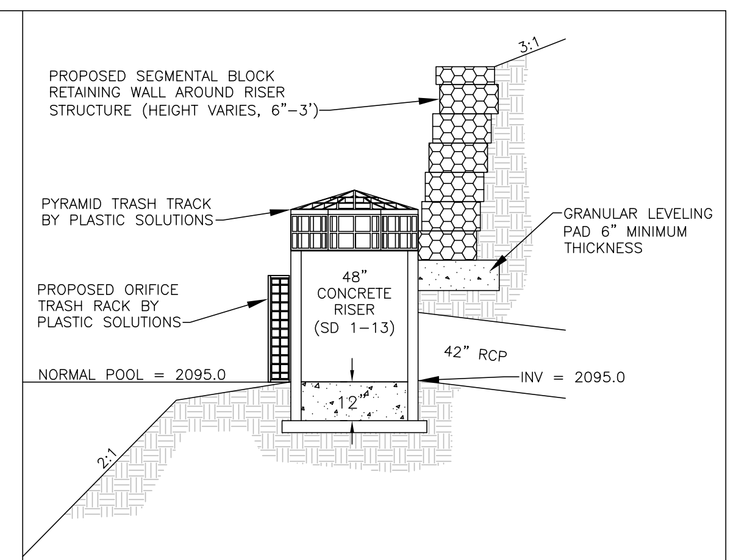

SECTION A–A

NOT TO SCALE

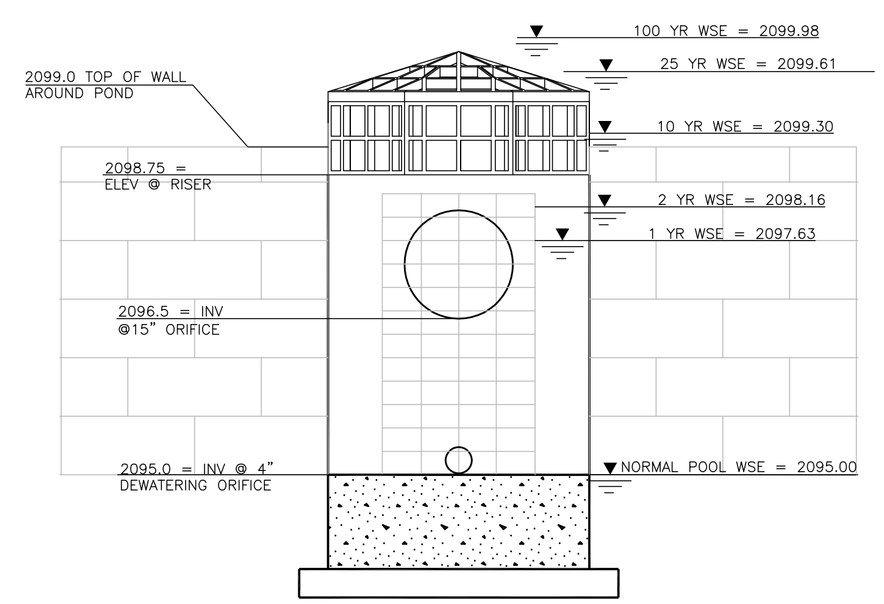

OUTLET STRUCTURE DETAIL

NOT TO SCALE

TOWN ENGINEER	DATE
TOWN PLANNER	DATE

COMMONWEALTH OF VIRGINIA
24 JUL 07
TREVOR M. KIMZEY
No. 036354
PROFESSIONAL ENGINEER

ANDERSON & ASSOCIATES, INC.
Professional Design Services
www.andassoc.com
Virginia - North Carolina - Tennessee
100 Ardmore St.
Blacksburg, Va. 24060
540-552-5592

DATE	: 24 JUL 07
DESIGNED:	RJH
DRAWN	: MSM
CHECKED :	TMK
QA / QC	: MTC

REV. #	COMMENTS	DATE
----	----	----
----	----	----
----	----	----
----	----	----
----	----	----

FIRST & MAIN
PHASE 1
BLACKSBURG, VIRGINIA

GRADING AND DRAINAGE DETAILS 4

DOCUMENT NO.
22559 – 210
SHEET
C2.21

Moy, Michael / 7/24/2007 9:59 AM / u:\22\22559\22559eng\design\plans_lsc\22559_sheet_esc.dwg