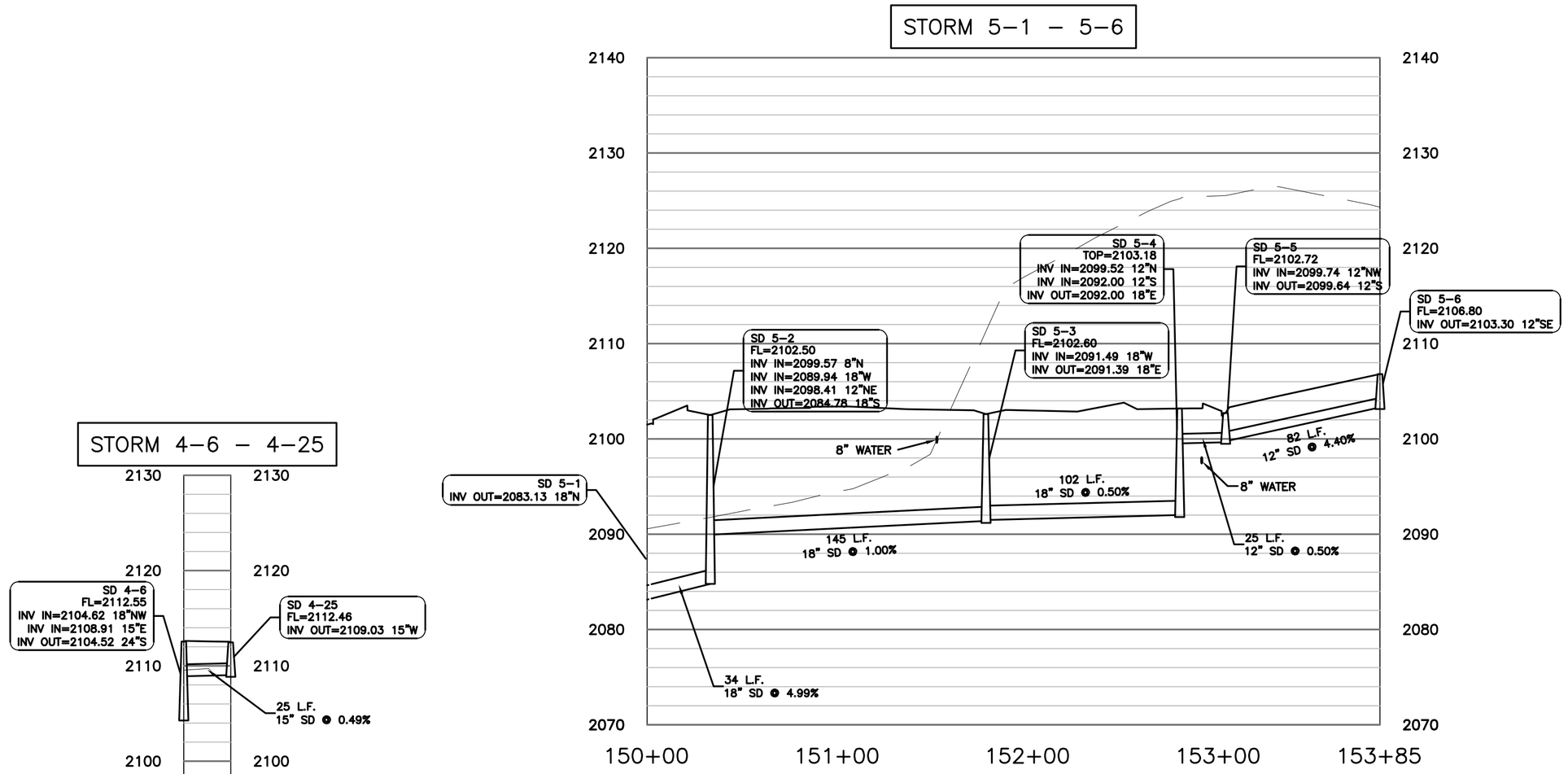

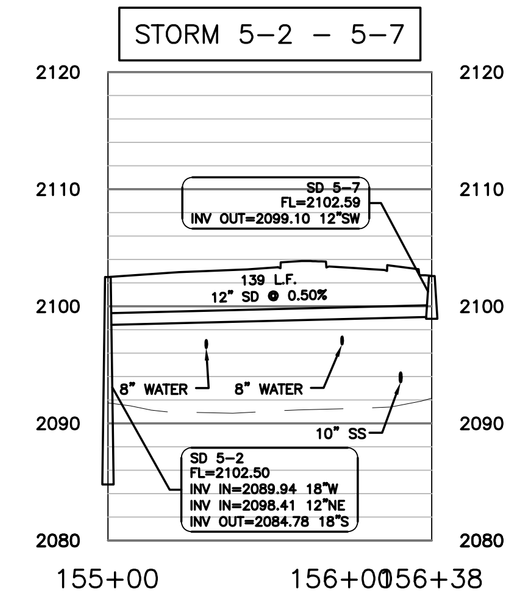

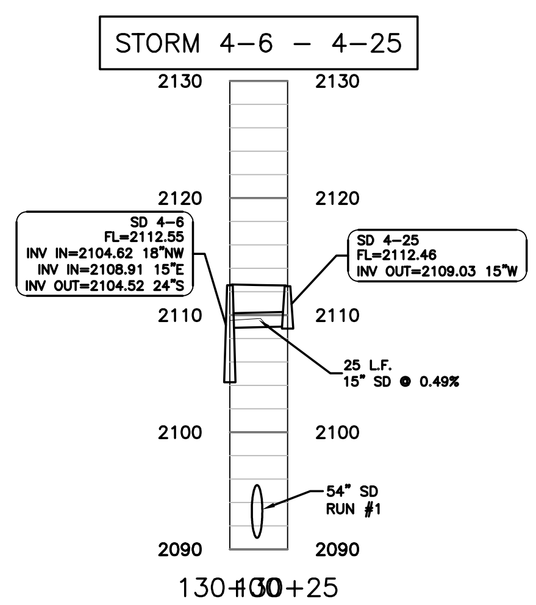

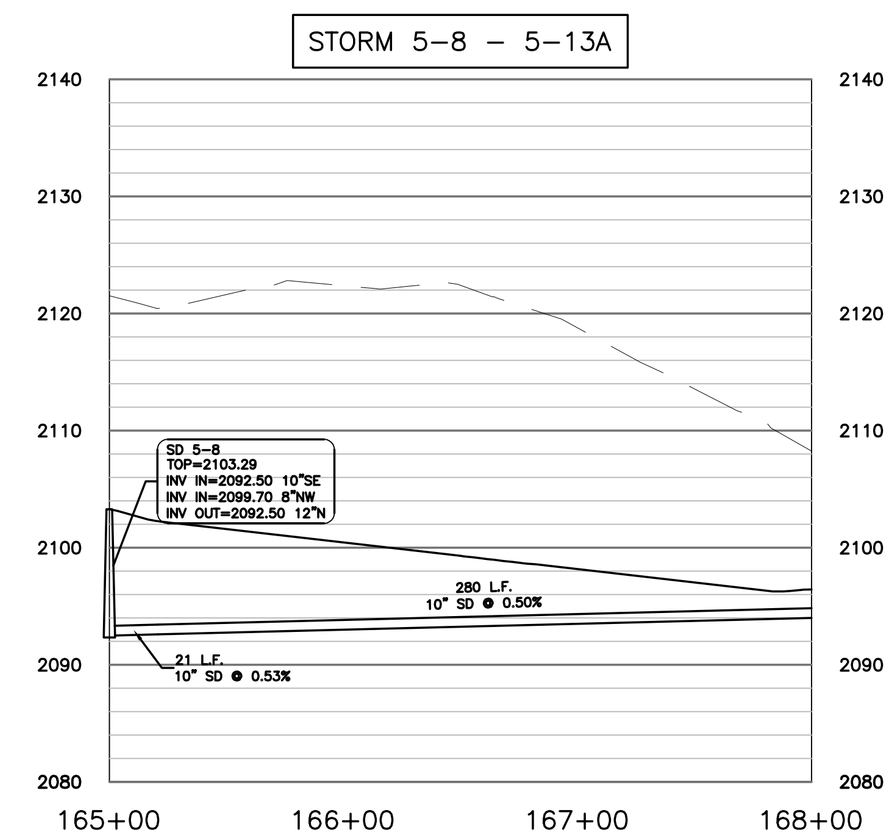

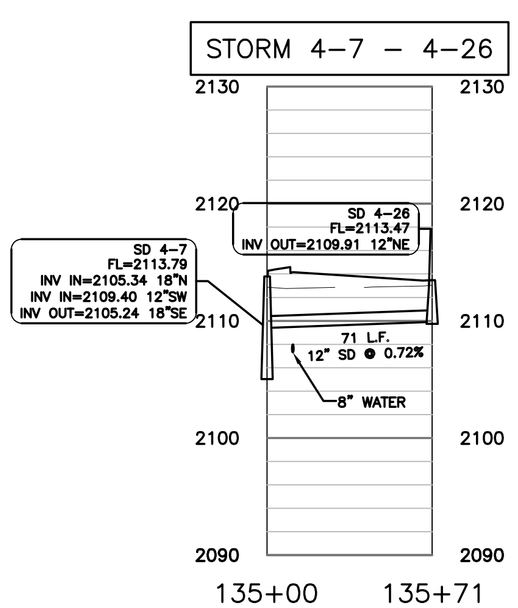

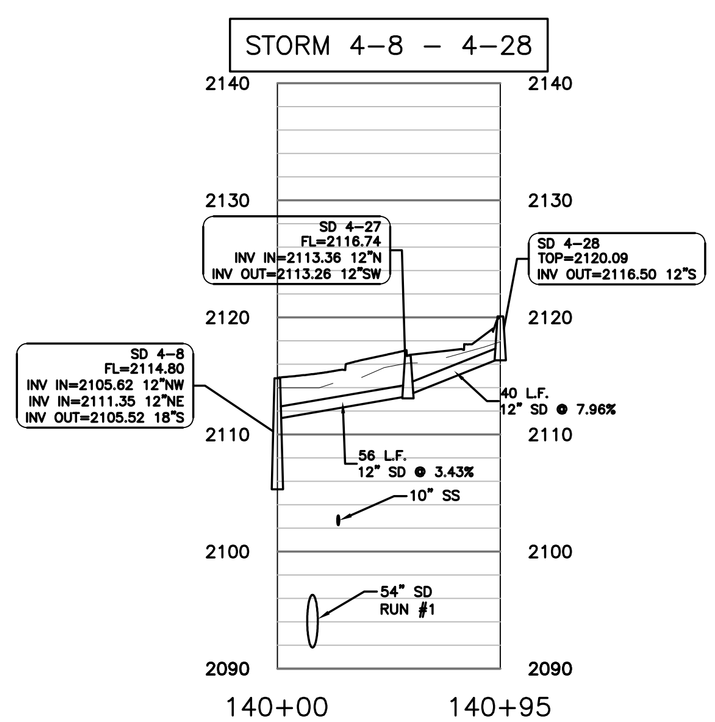

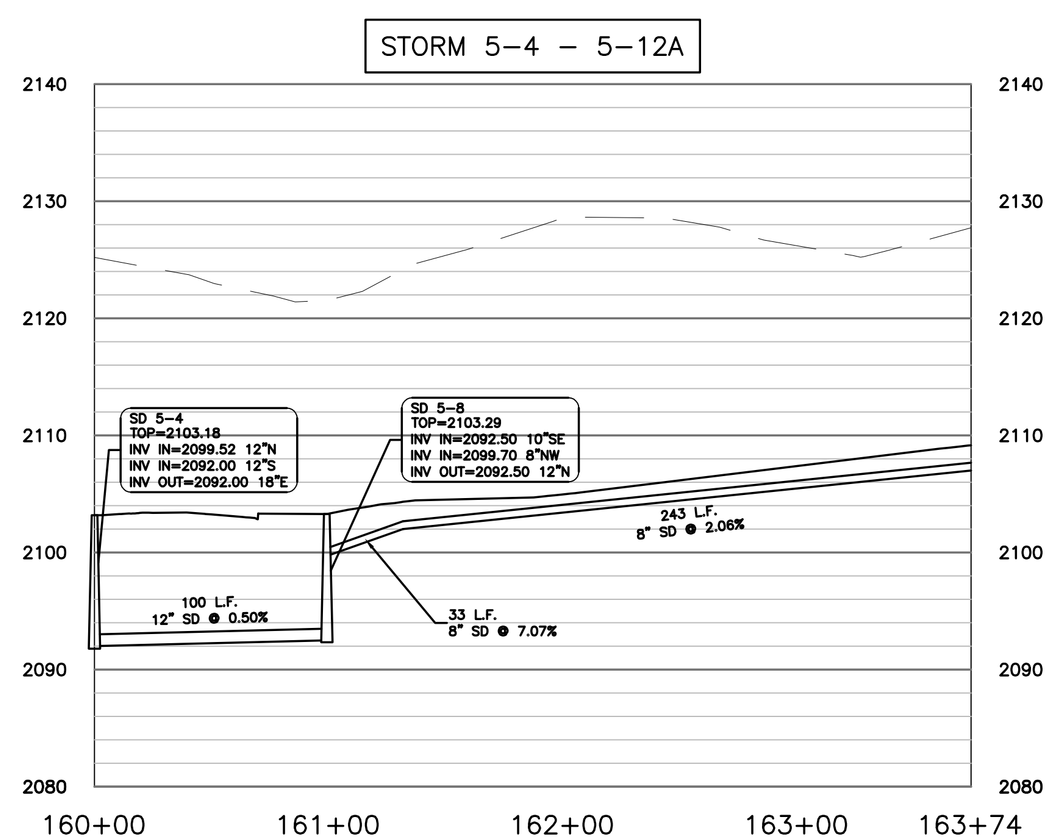

0 50 100
SCALE IN FEET

0 10 20
SCALE IN FEET

COMMONWEALTH OF VIRGINIA
24 JUL 07
TREVOR M. KIMZEY
No. 036354
PROFESSIONAL ENGINEER

LEGEND

EXISTING GROUND
PROPOSED GRADE

HORIZONTAL SCALE 1"=50'
VERTICAL SCALE 1"=10'

TOWN ENGINEER	DATE
TOWN PLANNER	DATE

ANDERSON & ASSOCIATES, INC.
Professional Design Services
www.andassoc.com
Virginia - North Carolina - Tennessee
100 Ardmore St.
Blacksburg, Va. 24060
540-552-5592

DATE : 24 JUL 07
DESIGNED: RJH
DRAWN : MSM
CHECKED : TMK
QA / QC : MTC

REV. #	COMMENTS	DATE
----	----	----
----	----	----
----	----	----
----	----	----
----	----	----

FIRST & MAIN
PHASE 1
BLACKSBURG, VIRGINIA

STORM PROFILES 5

DOCUMENT NO.
22559 – 210
SHEET
C2.26

Moy, Michael / 7/24/2007 9:59 AM / u:\22\22559\22559eng\design\plans_lsc\22559_sheet_esc.dwg