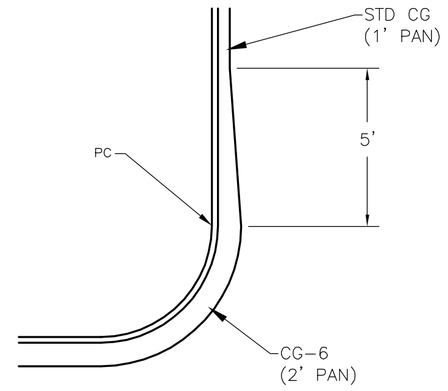

CG TAPER

NTS

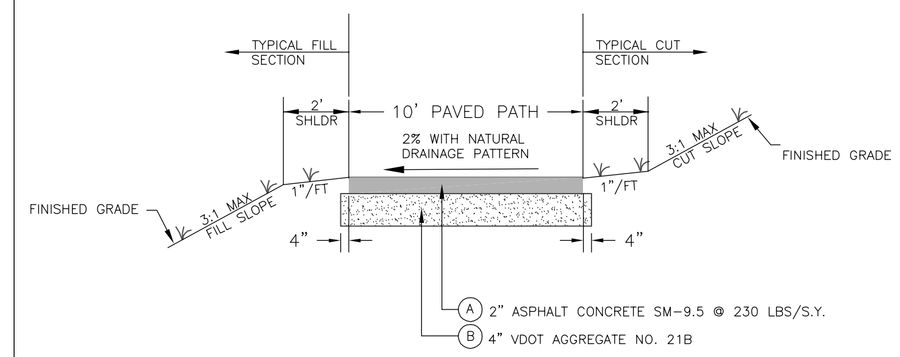

MULTI-USE PATH CROSS SECTION

NTS

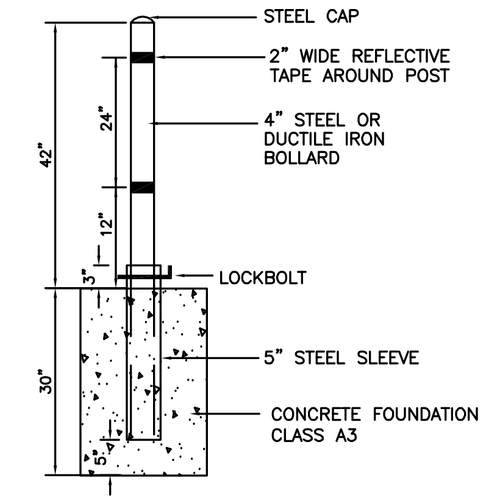

BOLLARD DETAIL

NOT TO SCALE

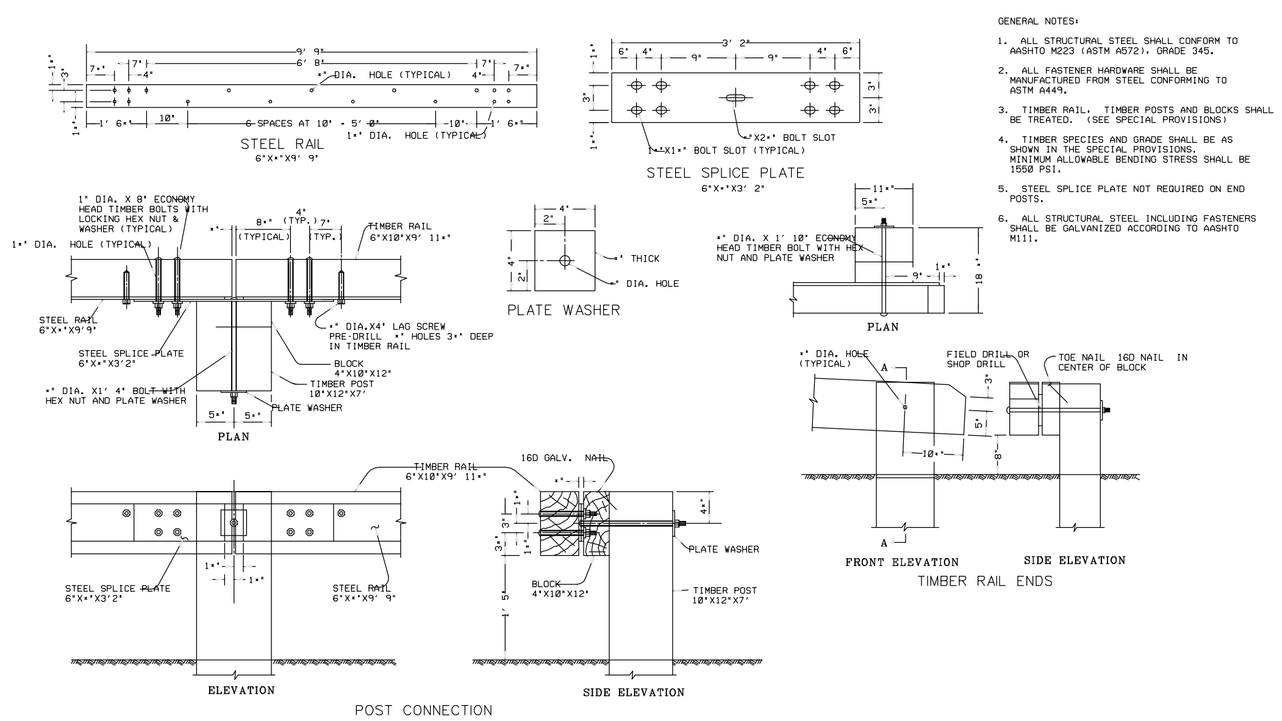

GENERAL NOTES:

1. ALL STRUCTURAL STEEL SHALL CONFORM TO AASHTO M223 (ASTM A572), GRADE 345.
2. ALL FASTENER HARDWARE SHALL BE MANUFACTURED FROM STEEL CONFORMING TO ASTM A449.
3. TIMBER RAIL, TIMBER POSTS AND BLOCKS SHALL BE TREATED. (SEE SPECIAL PROVISIONS)
4. TIMBER SPECIES AND GRADE SHALL BE AS SHOWN IN THE SPECIAL PROVISIONS. MINIMUM ALLOWABLE BENDING STRESS SHALL BE 1550 PSI.
5. STEEL SPLICE PLATE NOT REQUIRED ON END POSTS.
6. ALL STRUCTURAL STEEL INCLUDING FASTENERS SHALL BE GALVANIZED ACCORDING TO AASHTO M111.

SINGLE RAIL TIMBER GUARD RAIL (STEEL BACKED) DETAILS

NTS

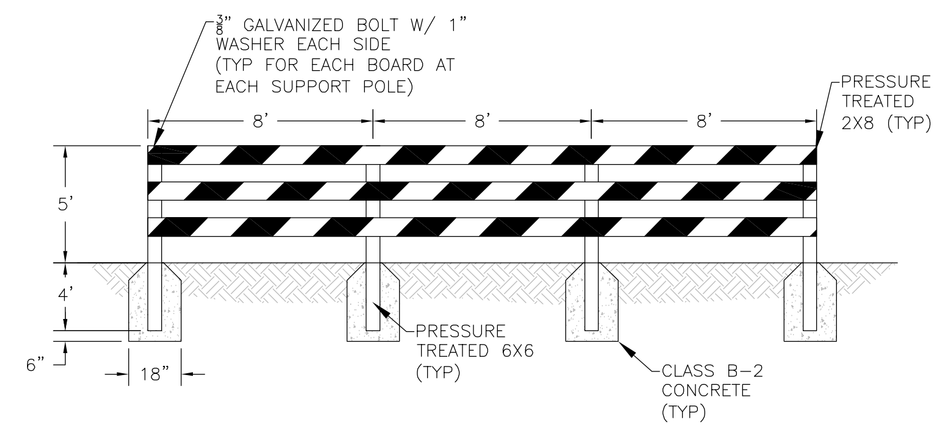

TEMPORARY BARRICADE

NTS

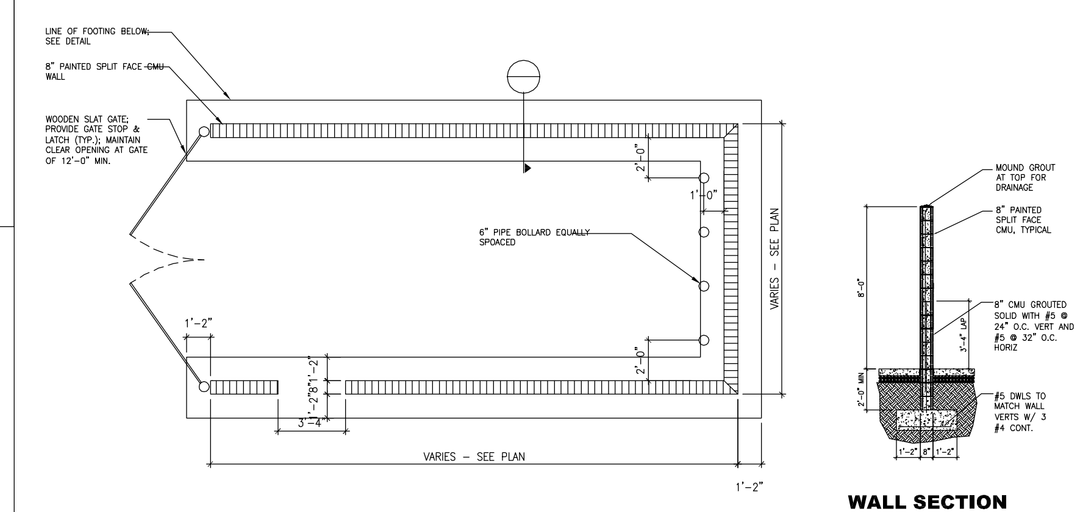

MASONRY TRASH ENCLOSURE

NTS

TOWN ENGINEER	DATE
TOWN PLANNER	DATE

COMMONWEALTH OF VIRGINIA
27 AUG 07
TREVOR M. KIMZEY
No. 036354
PROFESSIONAL ENGINEER

ANDERSON & ASSOCIATES, INC.
Professional Design Services
www.andassoc.com
Virginia - North Carolina - Tennessee
100 Ardmore St.
Blacksburg, Va. 24060
540-552-5592

DATE : 27 AUG 07
DESIGNED: RJH
DRAWN : MSM
CHECKED : TMK
QA / QC : MTC

REV. #	COMMENTS	DATE
---	---	---
---	---	---
---	---	---
---	---	---
---	---	---

FIRST & MAIN
PHASE 1
BLACKSBURG, VIRGINIA

SITE DETAILS 2

DOCUMENT NO. **22559 – 310**
SHEET **C1.19**

Moy, Michael / 8/20/2007 10:15 AM / u:\22\22559\22559eng\design\plans_lsc\22559_sheet_site_details.dwg