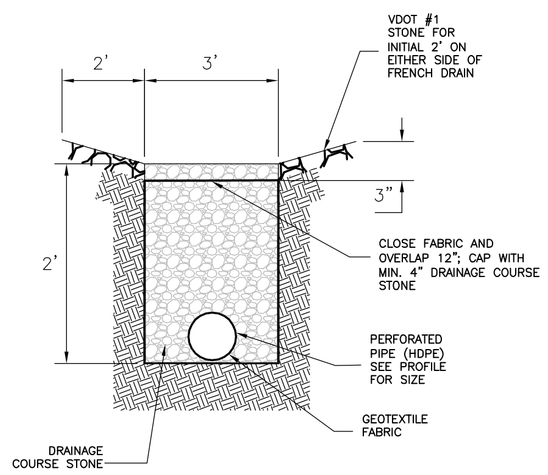

FRENCH DRAIN
NTS

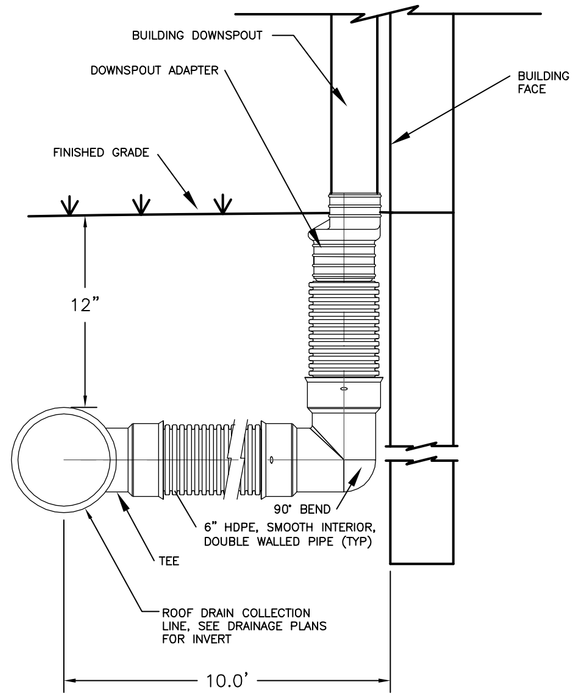

ROOF DRAIN–2

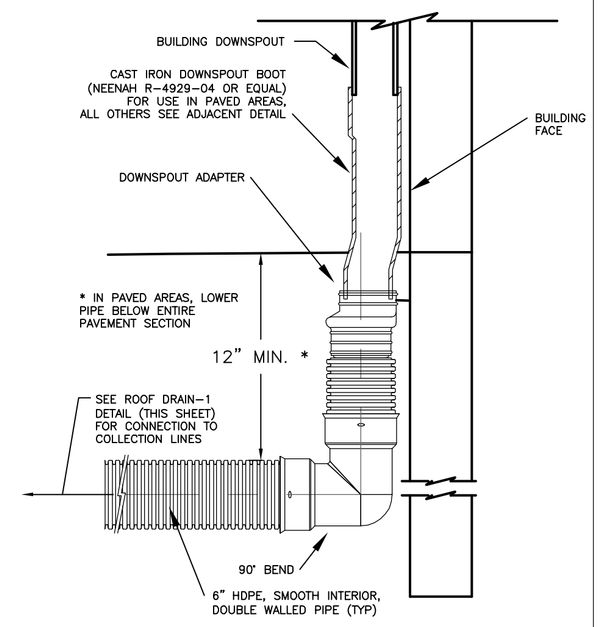

ROOF DRAIN–3: IN PAVED AREAS (NTS)

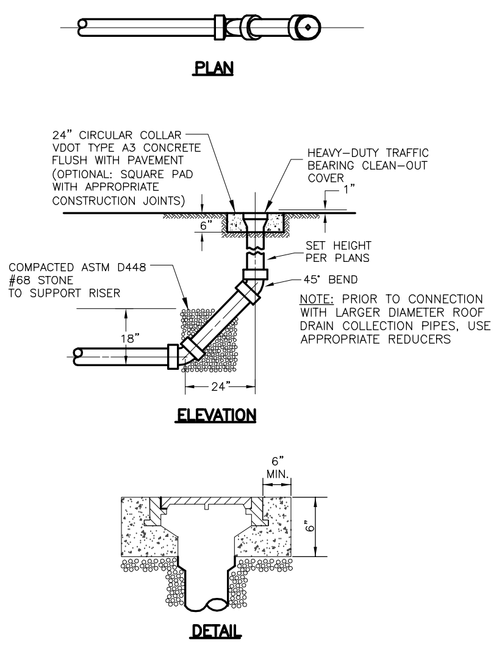

CLEANOUT (NTS)

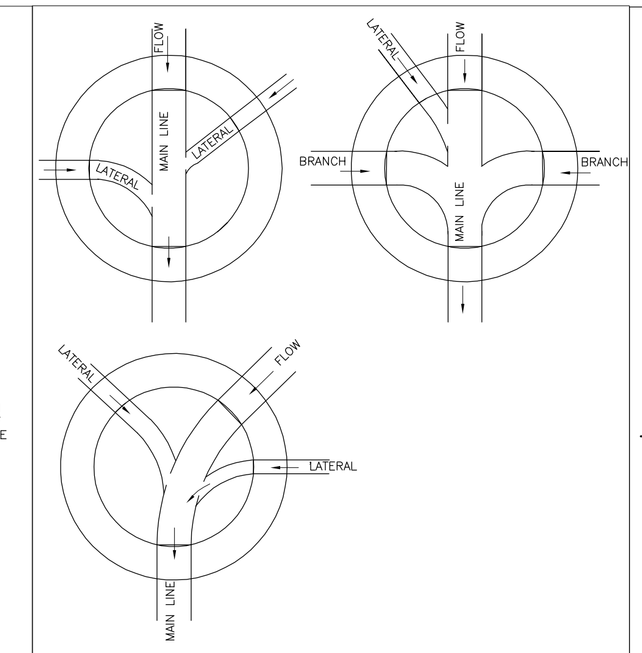

MANHOLE INVERT CHANNELING

MH–4

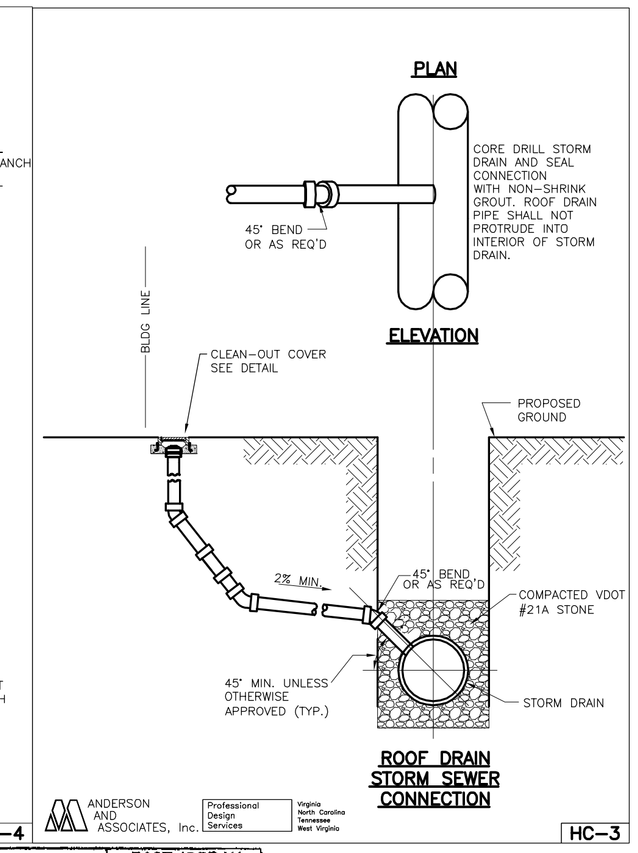

ROOF DRAIN STORM SEWER CONNECTION

ANDERSON AND ASSOCIATES, Inc. Professional Design Services Virginia North Carolina Tennessee West Virginia

HC–3

THIS DETAIL APPLICABLE FOR DEPTHS LESS THAN 23 FEET. SEE PLANS FOR MODIFICATIONS IN DEEPER TRENCHES.

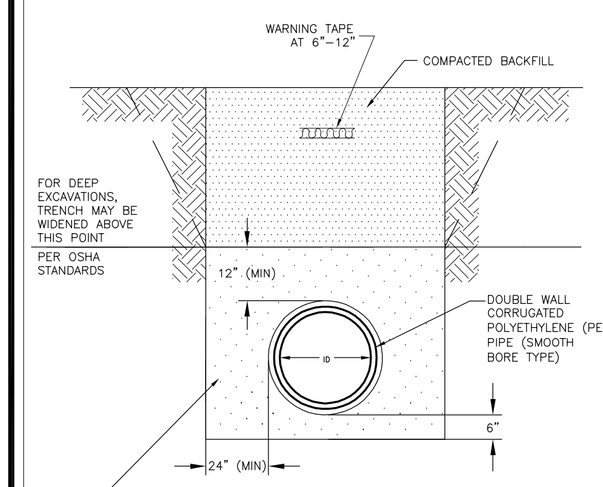

BACKFILL: CRUSHER RUN AGGREGATE SIZE NO 25 OR 26, FLOWABLE BACKFILL OR COMPACTED SOILS CONFORMING TO AASHTO M145: "THE CLASSIFICATION OF SOILS AND SOIL AGGREGATE, MIXTURES FOR HIGHWAY CONSTRUCTION PURPOSES." GROUP A–1, A–2–4, A–2–5, A–2–6 OR A–3 (GW, GP, SW, GM AND SM) ONLY.

POLYETHYLENE OR CORRUGATED STEEL PIPE STORM SEWER TRENCH BED

TB–7

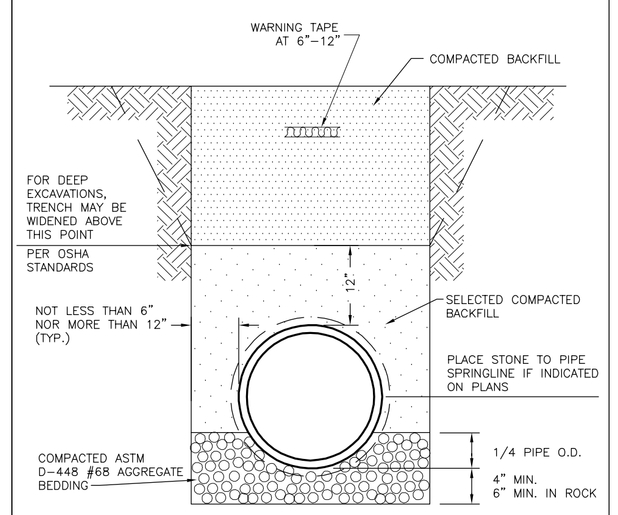

THIS DETAIL APPLICABLE FOR DEPTHS LESS THAN 14 FEET. SEE PLANS FOR MODIFICATIONS IN DEEPER TRENCHES.

REINFORCED CONCRETE PIPE STORM SEWER TRENCH BED

ANDERSON AND ASSOCIATES, Inc. Professional Design Services Virginia North Carolina Tennessee West Virginia

TB–2

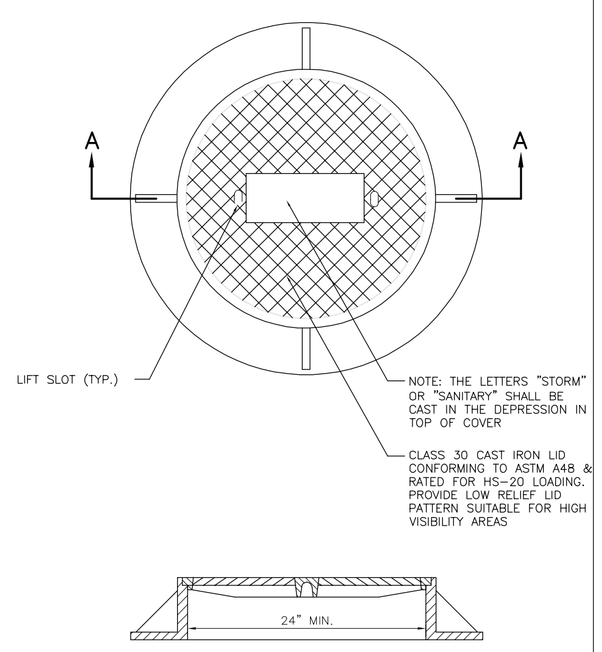

SECTION A–A

MANHOLE LID FOR USE IN CONCRETE PAVED AREAS

FC–9

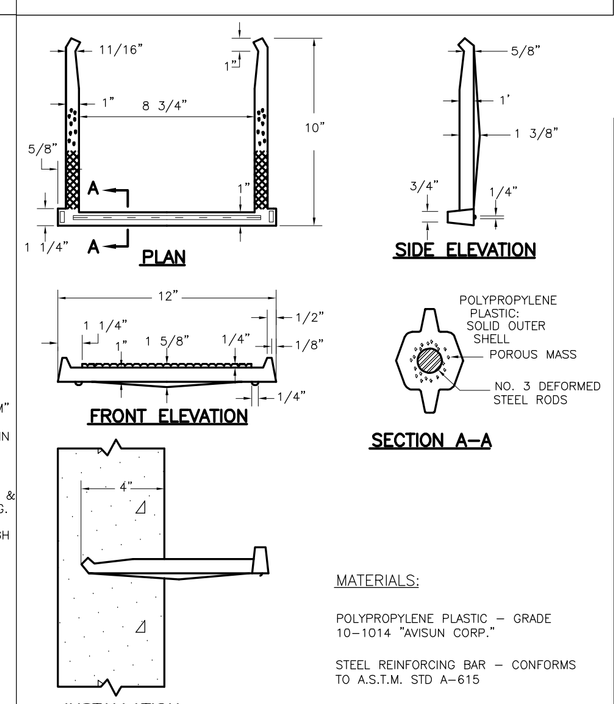

MATERIALS:

POLYPROPYLENE PLASTIC – GRADE 10–1014 "AVISUN CORP."

STEEL REINFORCING BAR – CONFORMS TO A.S.T.M. STD A–615

STEPS SHALL BE POURED INTEGRALLY WITH THE MANHOLE SECTION AND NOT MORTARED OR GROUTED LATER

STANDARD MANHOLE STEP

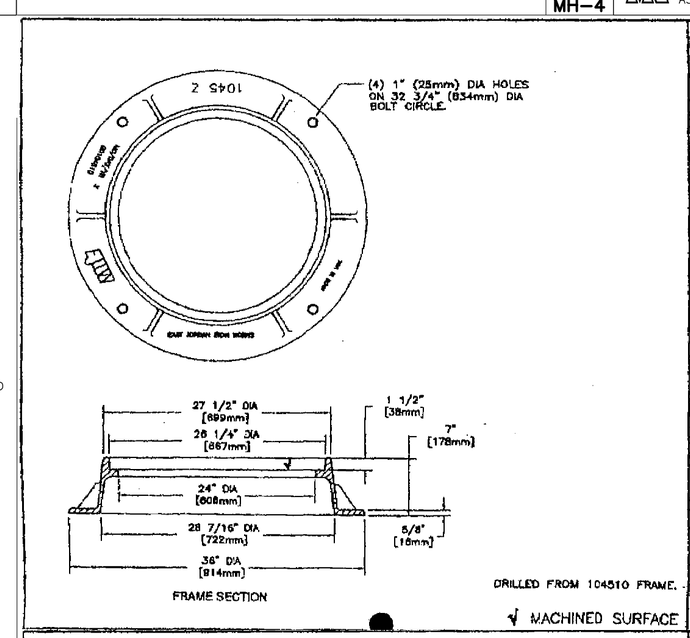

EAST JORDAN IRON WORKS, INC. P.O. BOX 439 EAST JORDAN, MI. 49727 1-800-874-4100 FAX 231-536-4458	
DRAWN DEW	DATE 09/30/02
APPROVED	DATE
MANHOLE FRAME	
PRODUCT NO. 00104510 DIPPED	
CATALOG NO. 1045Z	
REF. PRODUCT DRAWING 104510	
EST. WT. FRAME: 165 LBS 75kg	
OPEN AREA N/A	
MAT'L SPEC. FRAME – GRAY IRON ASTM A48 CL35	
LOAD RATING HEAVY DUTY	

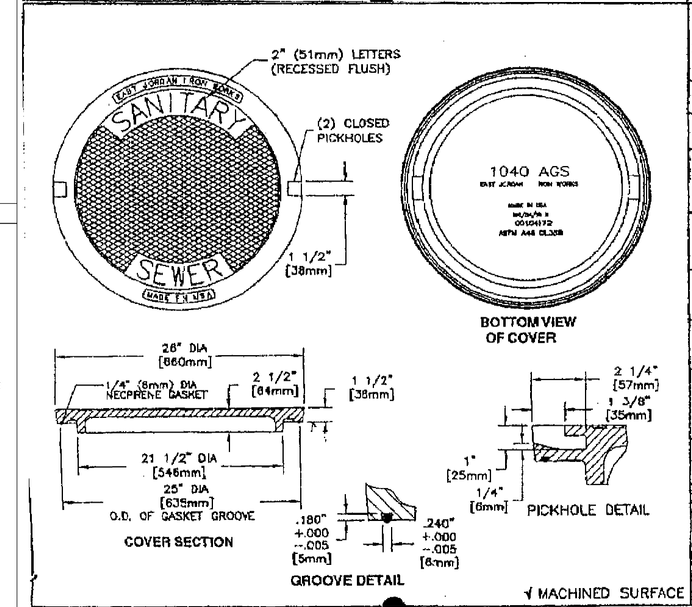

EAST JORDAN IRON WORKS, INC. P.O. BOX 439 EAST JORDAN, MI. 49727 1-800-874-4100 FAX 231-536-4458	
DRAWN TCL	DATE 04/08/03
APPROVED	DATE
SPECIAL LETTERED COVER	
PRODUCT NO. 00104172 (DIPPED)	
CATALOG NO. 1040AGS	
REF. PRODUCT DRAWING 104172	
EST. WT. COVER: 145 LBS 66kg	
OPEN AREA N/A	
MAT'L SPEC. COVER – GRAY IRON ASTM A48 CL35	
LOAD RATING HEAVY DUTY	

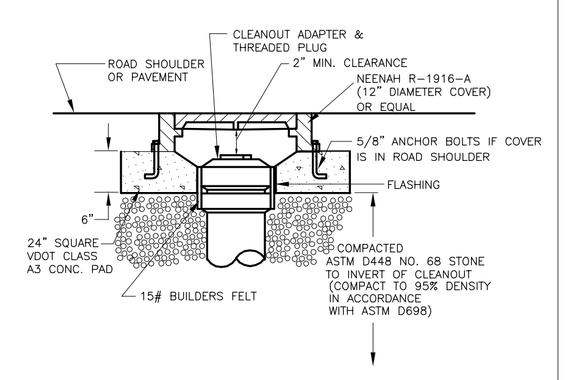

CLEANOUT COVER – TRAFFIC BEARING

(FOR USE WITH ALL CLEANOUTS IN PAVEMENT OR AS SPECIFIED ON PLANS)

COMMONWEALTH OF VIRGINIA
27 AUG 07
TREVOR M. KIMZEY
No. 036354
PROFESSIONAL ENGINEER

TOWN ENGINEER	DATE
TOWN PLANNER	DATE

ANDERSON & ASSOCIATES, INC.
Professional Design Services
www.andassoc.com
Virginia - North Carolina - Tennessee
100 Ardmore St.
Blacksburg, Va. 24060
540-552-5592

DATE : 27 AUG 07	REV. #	COMMENTS	DATE
DESIGNED: RJH	---	---	---
DRAWN : MSM	---	---	---
CHECKED : TMK	---	---	---
QA / QC : MTC	---	---	---

FIRST & MAIN
PHASE 1
BLACKSBURG, VIRGINIA

GRADING & DRAINAGE DETAILS 1

DOCUMENT NO. 22559 – 310
SHEET C2.18

Moy, Michael / 8/27/2007 7:38 AM / u:\22\22559\22559eng\design\plans_lsc\22559_sheet_drainage_details.dwg