TYPICAL VEE-SHAPED DIVERSION

TEMPORARY DIVERSION DIKE

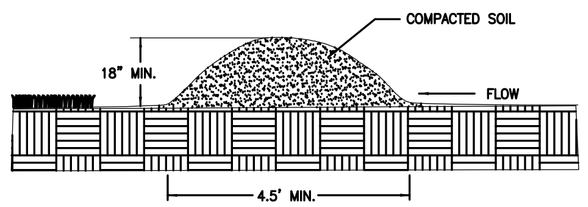

SILT FENCE CULVERT INLET PROTECTION

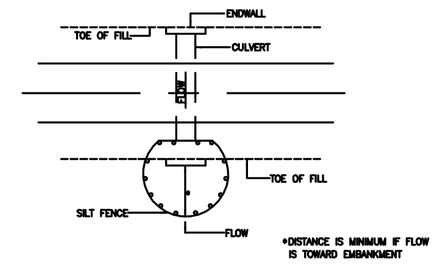

OPTIONAL STONE COMBINATION **

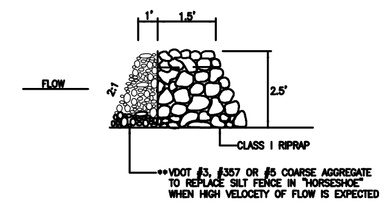

CONSTRUCTION OF A SILT FENCE (WITHOUT WIRE SUPPORT)

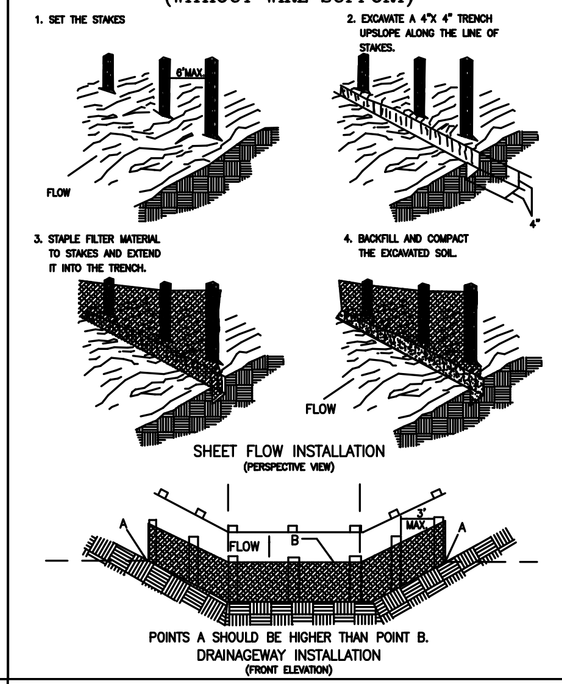

BLOCK AND GRAVEL DROP INLET SEDIMENT FILTER

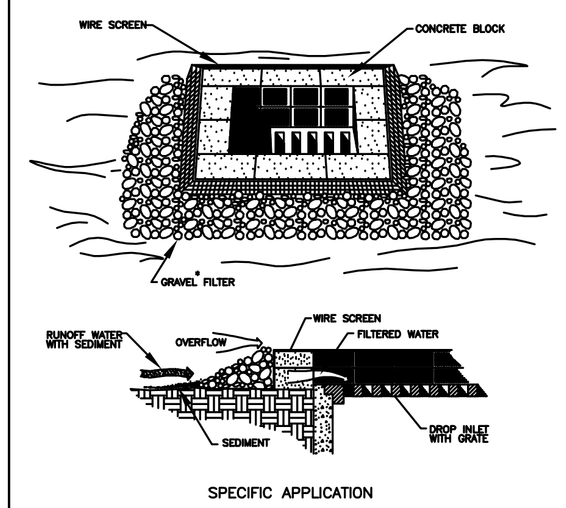

SPECIFIC APPLICATION

THIS METHOD OF INLET PROTECTION IS APPLICABLE WHERE HEAVY FLOW ARE EXPECTED AND WHERE AN OVERFLOW CAPACITY IS NECESSARY TO PREVENT EXCESSIVE PONDING AROUND THE STRUCTURE.

* GRAVEL SHALL BE VDOT #3, #357 OR 5 COURSE AGGREGATE.

SILT FENCE DROP INLET PROTECTION

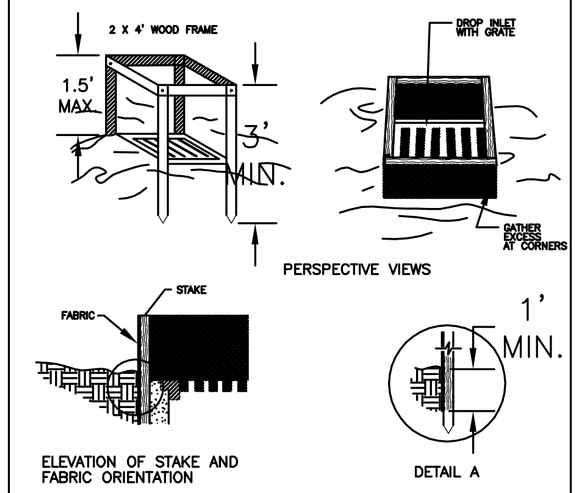

SPECIFIC APPLICATION

THIS METHOD OF INLET PROTECTION IS APPLICABLE WHERE THE INLET DRAINS A RELATIVELY FLAT AREA (NO MORE THAN 5%) WHERE THE INLET SHEET OR OVERLAND FLOW (NOT EXCEEDING 1 CFS) IS LIKELY TYPICAL. THE METHOD SHALL NOT APPLY TO INLETS RECEIVING CONCENTRATED FLOWS, SUCH AS IN STREET OR HIGHWAY MEDIANS.

MINIMUM TOP WIDTH (W) REQUIRED FOR SEDIMENT TRAP EMBANKMENTS ACCORDING TO HEIGHT OF EMBANKMENT (FEET)

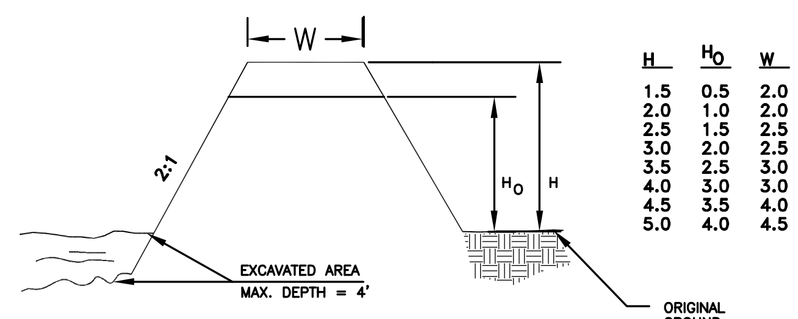

H	H_O	W
1.5	0.5	2.0
2.0	1.0	2.0
2.5	1.5	2.5
3.0	2.0	2.5
3.5	2.5	3.0
4.0	3.0	3.0
4.5	3.5	4.0
5.0	4.0	4.5

TEMPORARY SEDIMENT TRAP

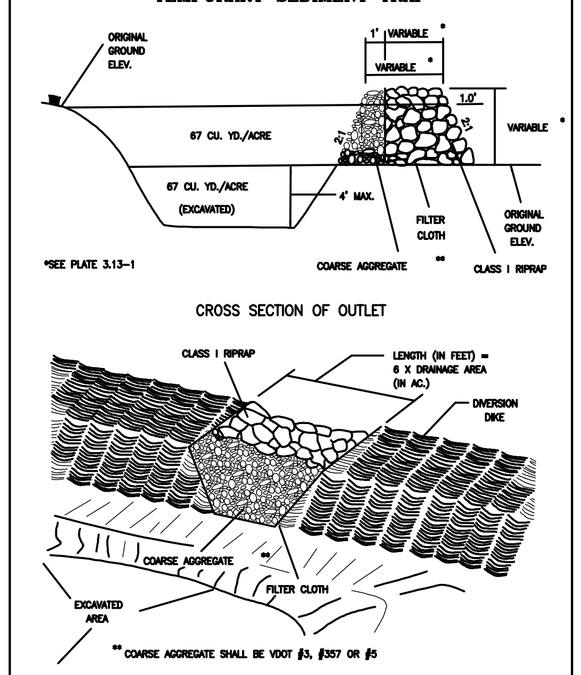

STONE CONSTRUCTION ENTRANCE

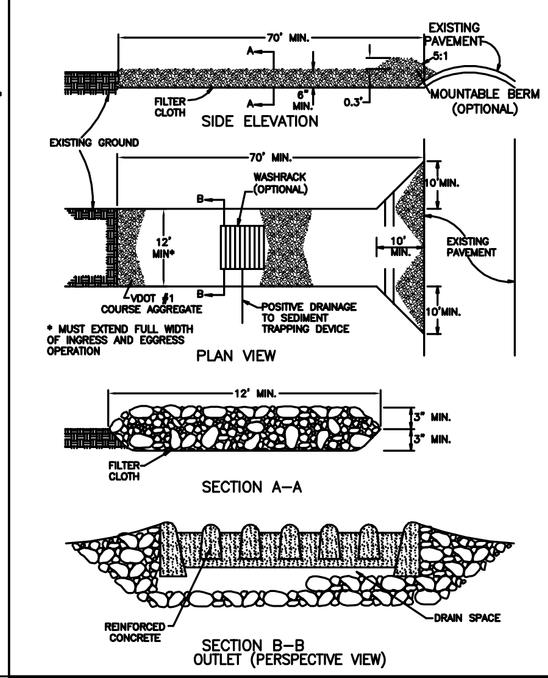

PIPE OUTLET CONDITIONS

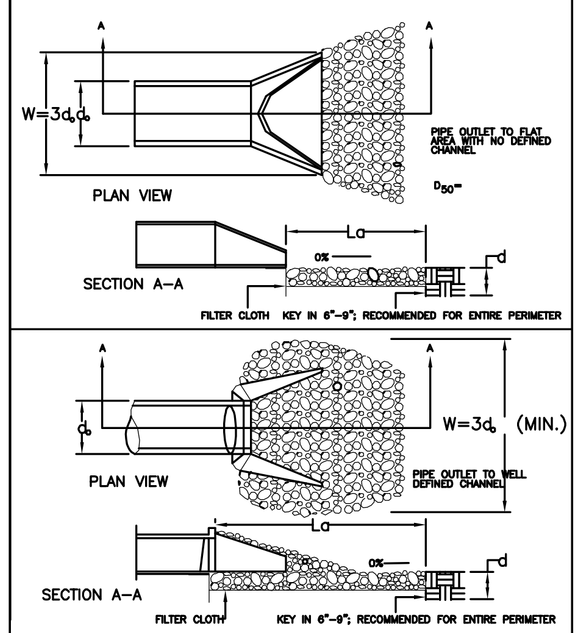

NOTES:
1. APRON LINING MAY BE RIPRAP, GROUTED RIPRAP, GABION BASKET, OR CONCRETE.
2. La IS THE LENGTH OF THE RIPRAP APRON AS CALCULATED.
3. d = 1.5 TIMES THE MAXIMUM STONE DIAMETER, BUT NOT LESS THAN 6 INCHES.

PIPE OUTLET PROTECTION TABLE

STRUCTURE	Do (IN)	La (FT)	W (FT)	RIPRAP D(50) SIZE	d (FT)
CULVERT 1	27	10	6.75'	6"	1'
CULVERT 2	24	10	6'	6"	1'
CULVERT 3	15	7	3.75'	6"	1'

CONSTRUCTION ENTRANCE

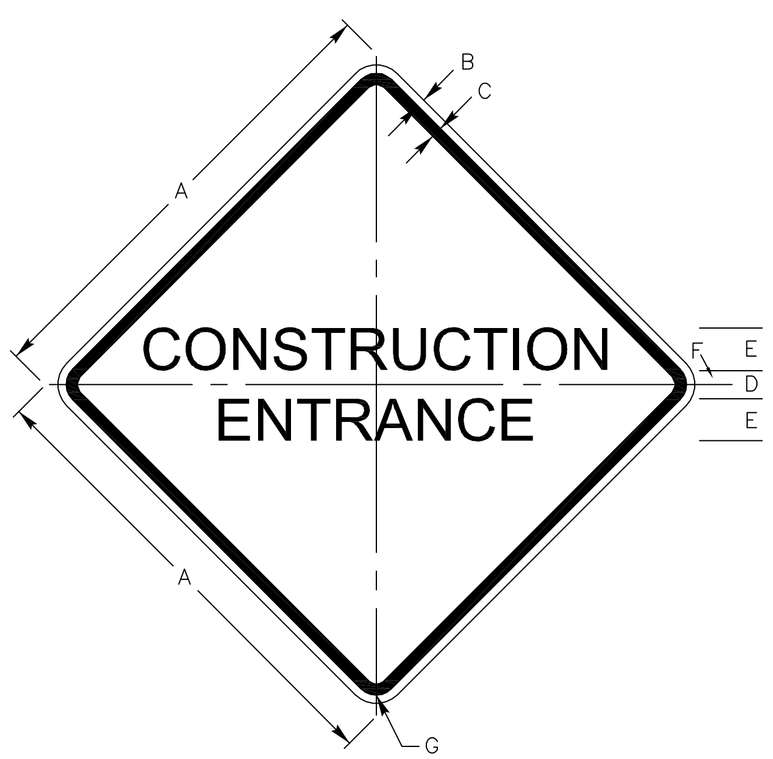

COLORS
LEGEND – BLACK (NON-REF)
BACKGROUND – ORANGE (REF)

DIMENSIONS (INCHES)

A	B	C	D	E	F	G
48	$\frac{3}{4}$	$1\frac{1}{4}$	$4\frac{1}{3}$	$4\frac{3}{4}$	3	$2\frac{1}{4}$

DROP INLET – INLET FILTER

NOTE: THE INLET FILTER WILL BE MANUFACTURED FROM A WOVEN POLYPROPYLENE FABRIC THAT MEETS OR EXCEEDS THE FOLLOWING SPECIFICATIONS.

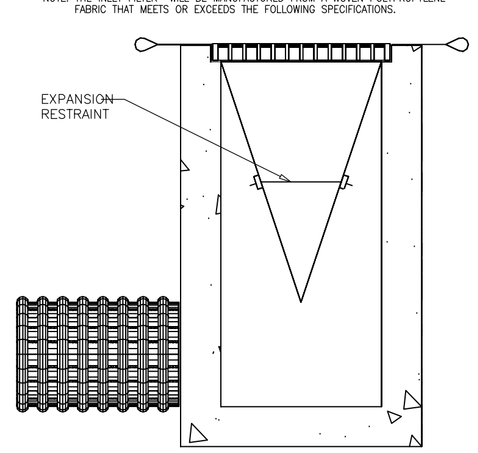

INLET FILTER SPECS

PROPERTIES	TEST METHOD	UNITS
GRAB TENSILE STRENGTH	ASTM D-4632	300 LBS
GRAB TENSILE ELONGATION	ASTM D-4632	20 %
PUNCTURE	ASTM D-4833	120 LBS
MULLEN BURST	ASTM D-3786	800 PSI
TRAPEZOID TEAR	ASTM D-4533	120 LBS
UV RESISTANCE	ASTM D-4355	80 %
APPARENT OPENING SIZE	ASTM D-4751	40 US SIEVE
FLOW RATE	ASTM D-4491	40 GAL/MIN/SQ FT
PERMITTIVITY	ASTM D-4491	0.50 SEC -1

TEMPORARY RIGHT-OF-WAY DIVERSIONS

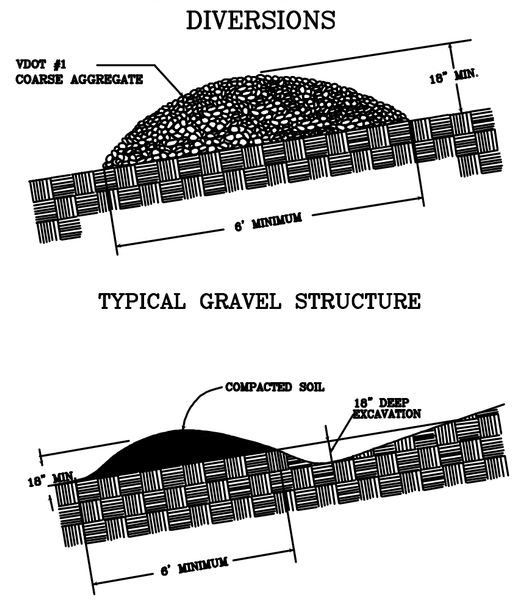

GRAVEL CURB INLET SEDIMENT FILTER

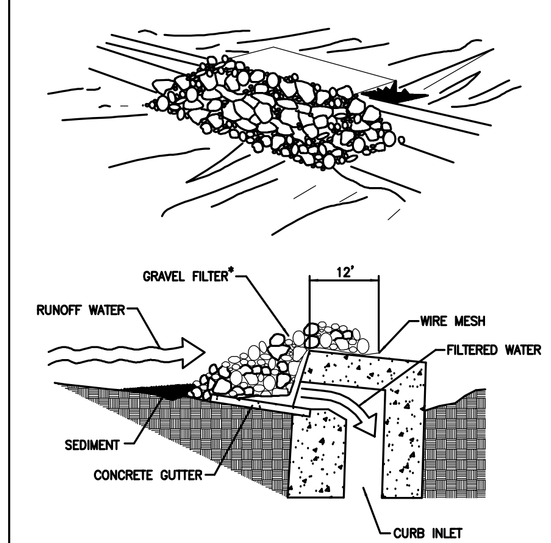

SPECIFIC APPLICATION

THIS METHOD OF INLET PROTECTION IS APPLICABLE AT CURB INLET WHERE PONDING IN FRONT OF THE STRUCTURE IS NOT LIKELY TO CAUSE INCONVENIENCE OR DAMAGE TO ADJACENT STRUCTURES AND UNPROTECTED AREAS.

*GRAVEL SHALL BE VDOT #3, #357 OR 5 COARSE AGGREGATE.

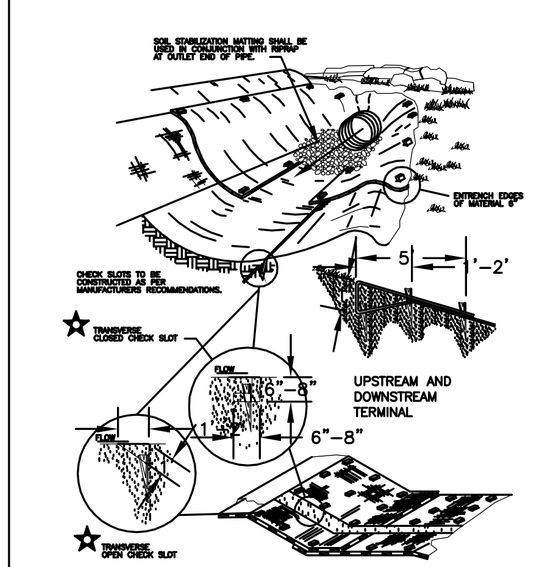

TYP. TREATMENT-2 SOIL STABILIZATION MATTING INSTALL. (NTS)

Source: Va. SWCC

Plate 3.11-1

27 AUG 07
TREVOR M. KIMZEY
No. 036354
COMMONWEALTH OF VIRGINIA
PROFESSIONAL ENGINEER

TOWN ENGINEER	DATE
TOWN PLANNER	DATE

ANDERSON & ASSOCIATES, INC.
Professional Design Services
www.andassoc.com
Virginia - North Carolina - Tennessee
100 Ardmore St.
Blacksburg, Va. 24060
540-552-5592

DATE : 27 AUG 07
DESIGNED: RJH
DRAWN : MSM
CHECKED : TMK
QA / QC : MTC

REV. #	COMMENTS	DATE
---	---	---
---	---	---
---	---	---
---	---	---
---	---	---

FIRST & MAIN
PHASE 1
BLACKSBURG, VIRGINIA

EROSION & SEDIMENT CONTROL DETAILS

DOCUMENT NO.
22559 – 310
SHEET
C3.04

Moy, Michael / 8/14/2007 11:14 AM / u:\22\22559\22559eng\design\plans_lsc\22559_sheet_esc_details.dwg