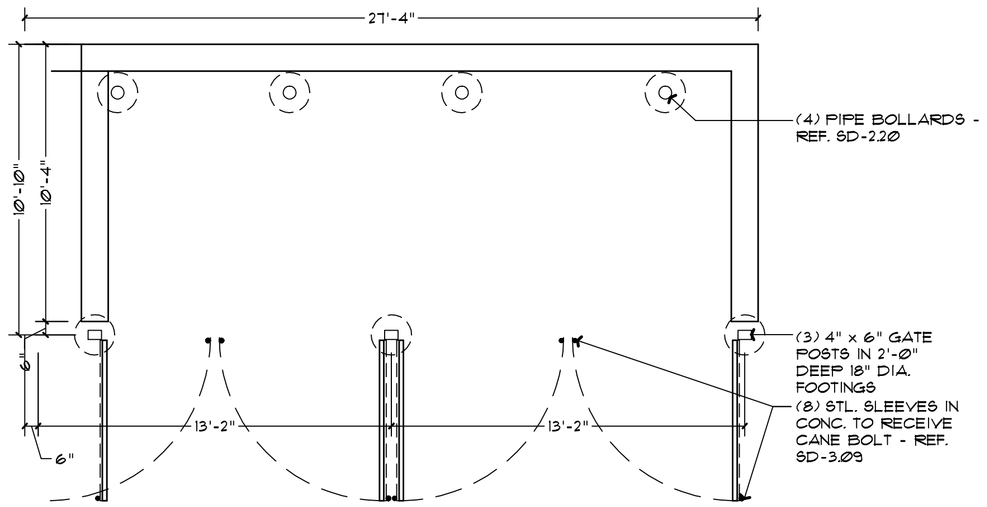

TRASH ENCLOSURE PLAN

1/4" = 1'-0"

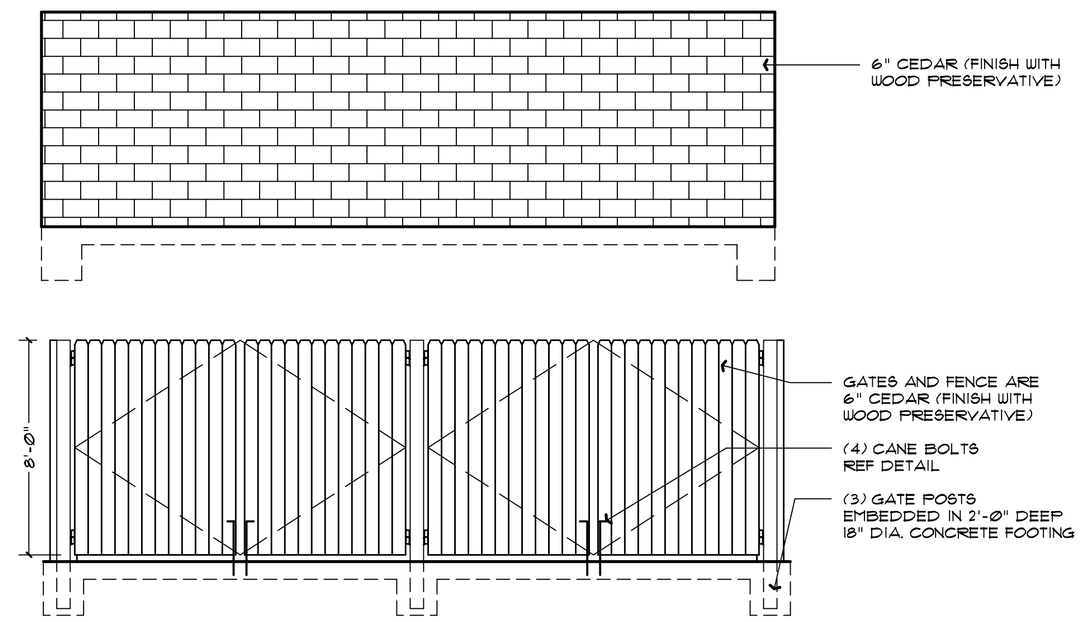

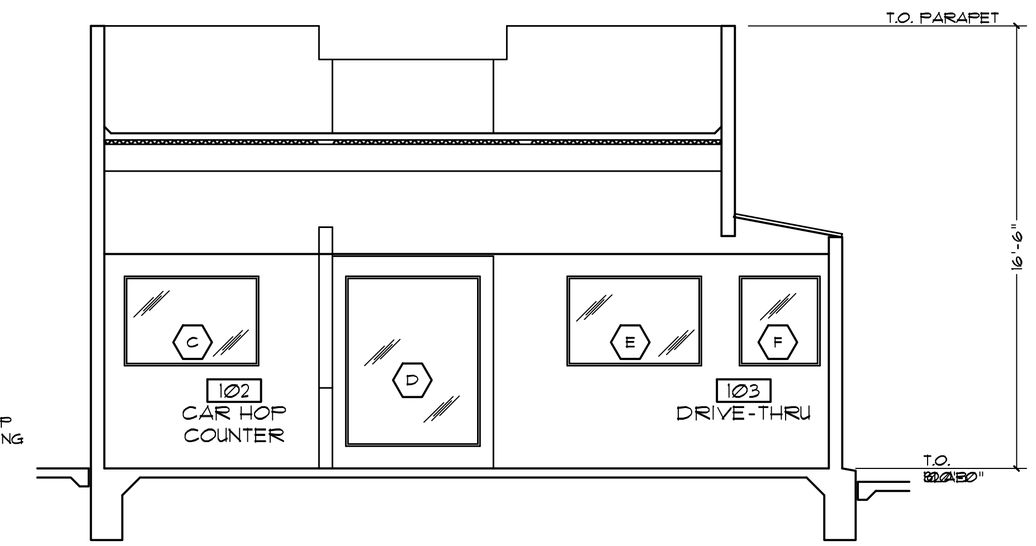

TRASH ENCLOSURE ELEV.

1/4" = 1'-0"

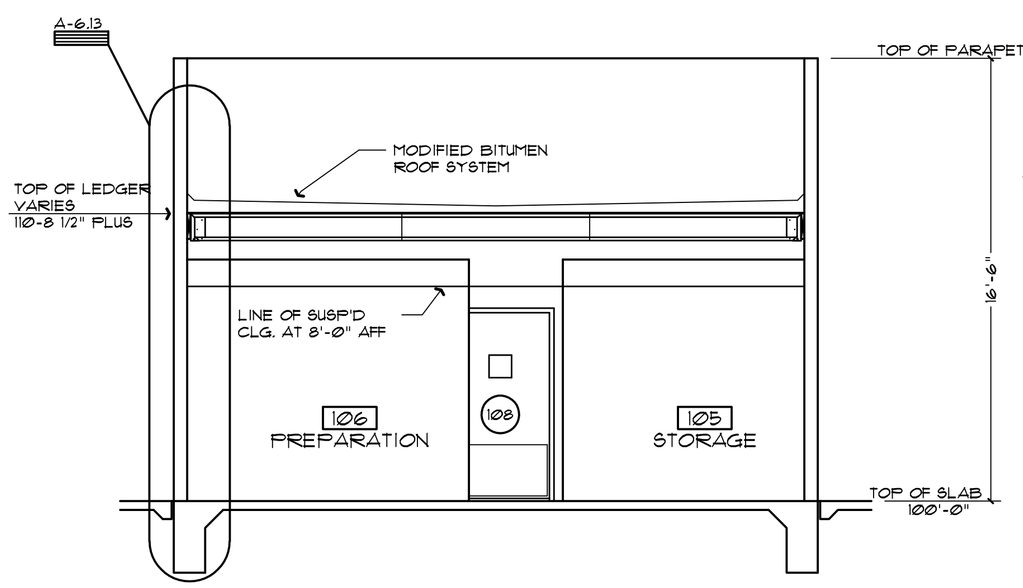

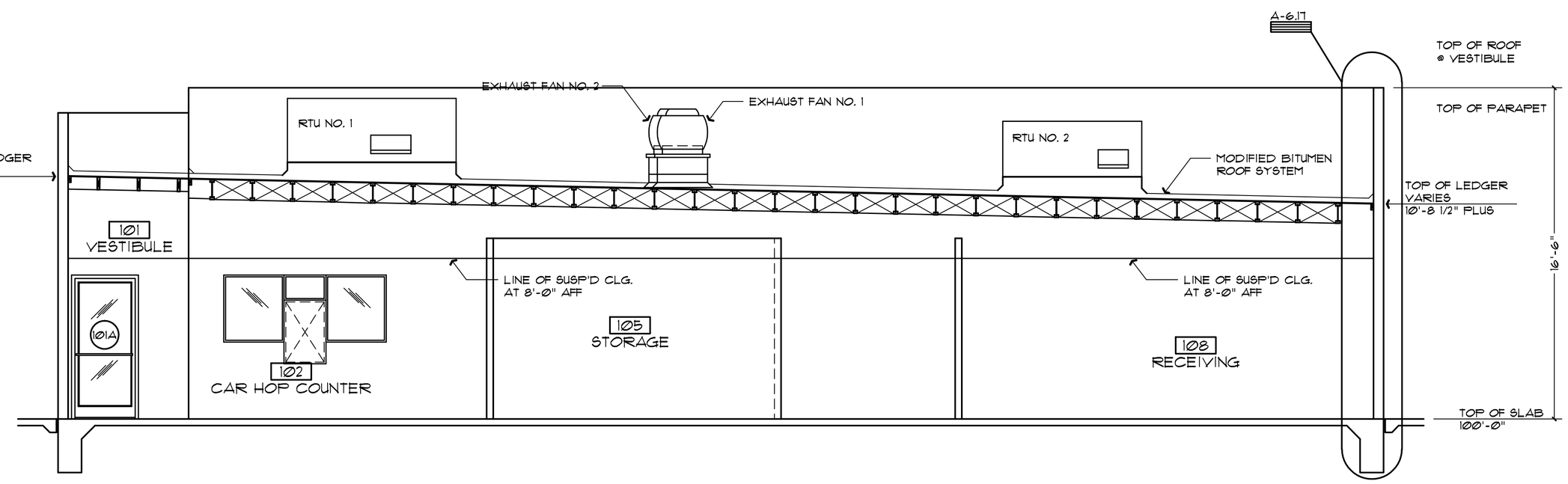

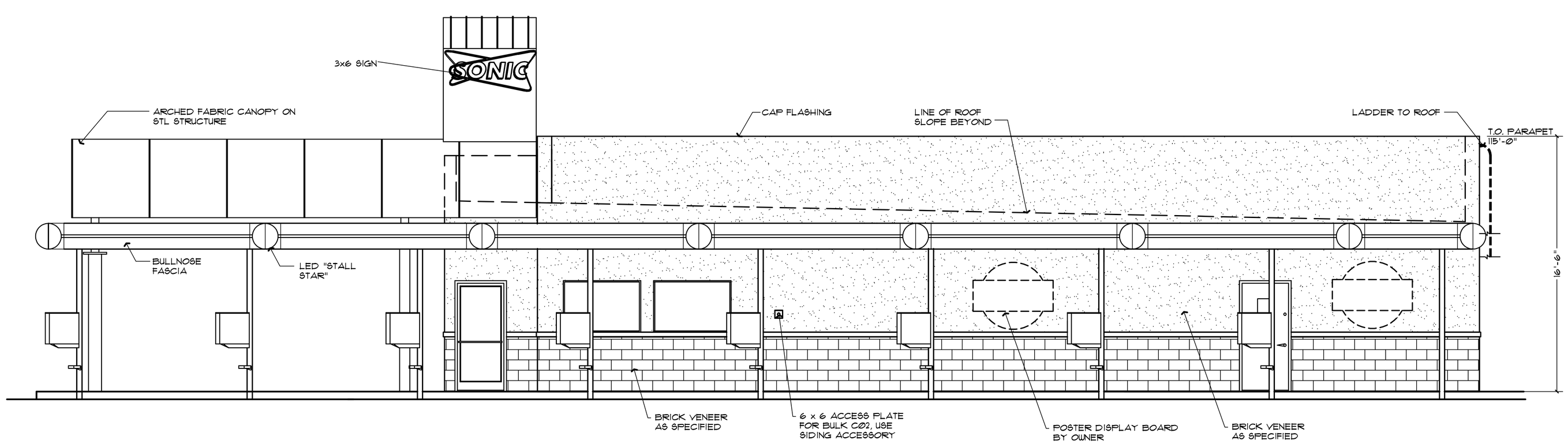

NO	DATE	REVISIONS

SONIC CORPORATION
101 PARK AVENUE
OKLAHOMA CITY, OK 73102
OFFICE: 405-280-1654
FAX: 405-280-7566

COPYRIGHT 1998-2002 AMERICA'S DRIVE-IN TRUST
THESE DRAWINGS ARE NOT TO BE REPRODUCED IN ANY FORM OR OTHER THAN BY THE DESIGNATED SONIC DRIVE-IN OWNER FOR CONSTRUCTION OF THE DRIVE-IN AT THE SPECIFIED LOCATION.

SONIC DRIVE-IN

BUILDING TYPE: 02D

STREET
CITY

EXTERIOR ELEVATIONS

SHEET
A0a

DWG: DESOTO-A0
DATE: APRIL 25, 2002