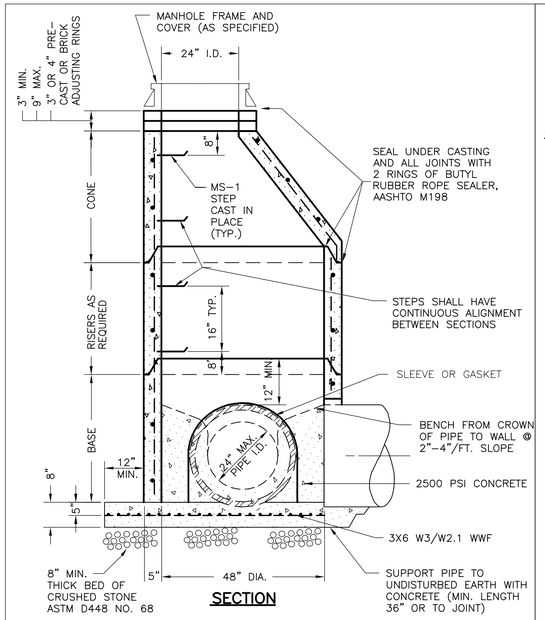

SECTION

NOTE: MATERIALS AND FABRICATION IN ACCORDANCE WITH ASTM C478 EXCEPT AS OTHERWISE SHOWN, CONE WILL BE OF THE ECCENTRIC TYPE. GROUT PIPE INTO MANHOLE WALL WITH NON-SHRINK GROUT.

PRECAST CONCRETE MANHOLE
(FOR USE ON EXISTING LINES)

MH-2

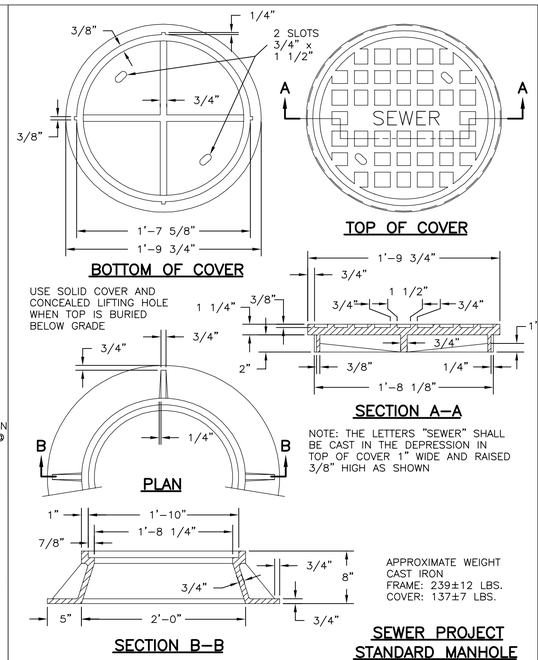

APPROXIMATE WEIGHT
CAST IRON
FRAME: 239±12 LBS.
COVER: 137±7 LBS.

SEWER PROJECT STANDARD MANHOLE FRAME & COVER

FC-1

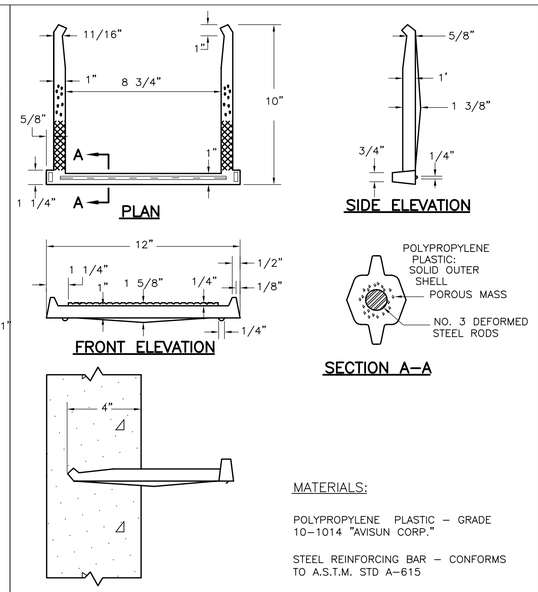

STEPS SHALL BE POURED INTEGRALLY WITH THE MANHOLE SECTION AND NOT MORTARED OR GROUTED LATER

MATERIALS:

POLYPROPYLENE PLASTIC – GRADE 10-1014 "AVISUN CORP."

STEEL REINFORCING BAR – CONFORMS TO A.S.T.M. STD A-615

STANDARD MANHOLE STEP

MS-1

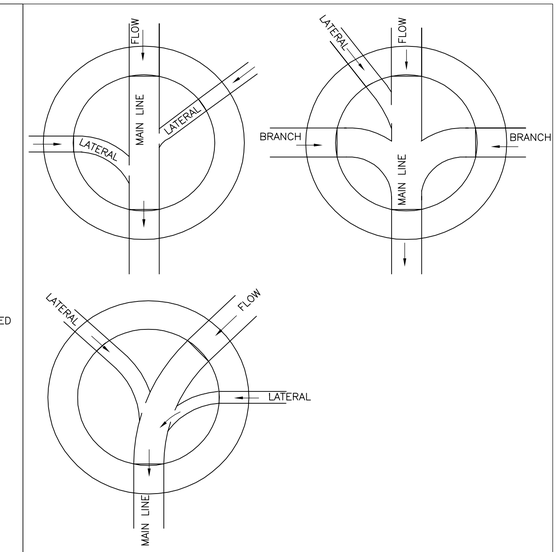

THE INVERT CHANNELS SHALL BE FORMED WITH CONCRETE AS SHOWN AND SHALL BE SMOOTH AND SEMI-CIRCULAR IN SHAPE, CONFORMING TO THE INSIDE OF THE ADJACENT SEWER SECTION. CHANGES IN THE DIRECTION OF FLOW SHALL BE MADE WITH A SMOOTH CURVE OF AS LARGE A RADIUS AS SIZE OF MANHOLE WILL PERMIT.
SEE SPECIFICATIONS FOR FURTHER DETAIL.

MANHOLE INVERT CHANNELING

MH-04

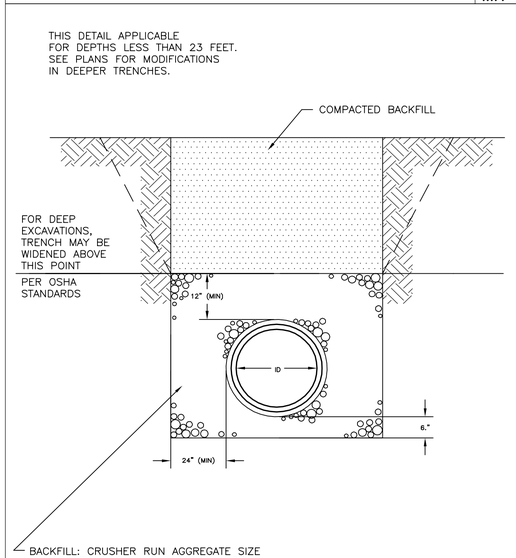

POLYETHYLENE PIPE STORM SEWER TRENCH BED

TB-7

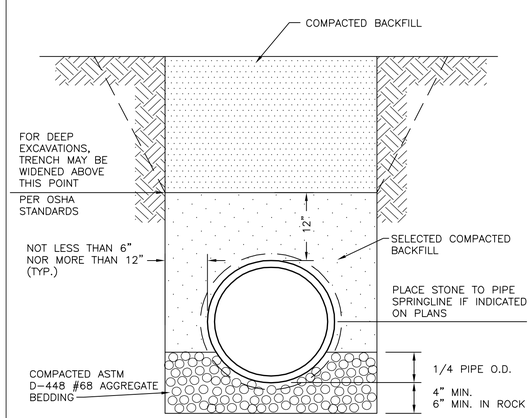

THIS DETAIL APPLICABLE FOR DEPTHS LESS THAN 14 FEET. SEE PLANS FOR MODIFICATIONS IN DEEPER TRENCHES.

STORM SEWER TRENCH BED

TB-2

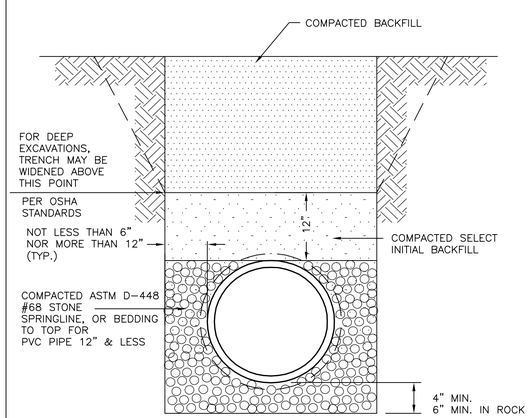

THIS DETAIL APPLICABLE FOR DEPTHS LESS THAN 14 FEET. SEE PLANS FOR MODIFICATIONS IN DEEPER TRENCHES.

GRAVITY SEWER TRENCH BEDDING

TB-1

ANDERSON & ASSOCIATES, INC.
Professional Design Services
www.andassoc.com
Virginia - North Carolina - Tennessee
100 Ardmore St.
Blacksburg, Va. 24060
540-552-5592

DATE	: 27 APR 07
DESIGNED	: DRB/CMW
DRAWN	: DRB/CMW
CHECKED	: TMK
QA / QC	: ---

REV. #	COMMENTS	DATE
---	---	---
---	---	---
---	---	---
---	---	---
---	---	---

FIRST & MAIN
SOUTH MAIN STREET IMPROVEMENTS
BLACKSBURG, VIRGINIA

STORM DETAILS

DOCUMENT NO.
22559 – 100
SHEET
C2.05

Baker, Robbie / 4/27/2007 7:35 AM / u:\22\22559\22559eng\design\plans_traffic\22559.42_sheet_road.dwg