Traffic Impact Analysis
The Standard at Blacksburg
Blacksburg, Virginia
March 2019

RAMEY KEMP & ASSOCIATES

TRAFFIC IMPACT ANALYSIS

FOR

THE STANDARD AT BLACKSBURG

LOCATED
IN
BLACKSBURG, VIRGINIA

Prepared for:
LCD Acquisitions, LLC
315 Oconee Street
Athens, Georgia 30601

Prepared by:
Ramey Kemp & Associates, Inc.
621 Jonestown Road
Suite 221
Winston-Salem, North Carolina 27103

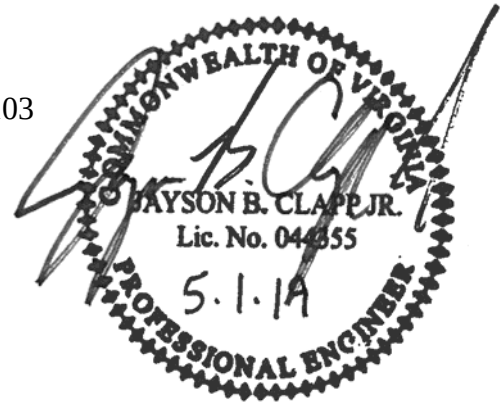

March 2019
[Updated May 2019]

RKA Project – 19025

TABLE OF CONTENTS

1. INTRODUCTION 1
    1.1. Executive Summary 1
    1.2. Site Location and Study Area 2
    1.3. Existing Land Uses 2
    1.4. Proposed Land Uses and Access 2
    1.5. Existing Roadway Network 4
2. TRAFFIC ANALYSIS PROCEDURE 4
3. EXISTING TRAFFIC CONDITIONS 8
    3.1. Analylsis of Existing (2018) Peak Hour Traffic Conditions 8
4. 'NO-BUILD' TRAFFIC CONDITIONS 8
    4.1. Background Traffic Growth 10
    4.2. Adjacent Development Traffic 10
    4.3. 'No-Build' (2020) Peak Hour Traffic Conditions 10
    4.4. Analysis of Future (2020) 'No-Build' Peak Hour Traffic Conditions 10
5. PROJECT TRAFFIC 14
    5.1. Trip Generation 14
6. SITE TRIP DISTRIBUTION AND ASSIGNMENT 15
7. 'BUILD' TRAFFIC CONDITIONS 16
    7.1. Proposed 'Build' (2020) Peak Hour Traffic Conditions 16
    7.2. Analysis of Future (2020) 'Build' Peak Hour Traffic Conditions 16
8. CAPACITY ANALYSIS 22
    8.1. North Main Street and Progress Street/McDonald Street 22
    8.2. North Main Street and Patrick Henry Drive 23
    8.3. North Main Street and Montgomery Street NW 25
    8.4. North Main Street and YMCA Access/ Site Access 26
    8.5. North Main Street and Lucas Drive 28
    8.6. Montgomery Street NW and Site Access 29
9. CONCLUSIONS AND RECOMMENDATIONS 31

LIST OF TABLES

Table 1 Highway Capacity Manual - Levels of Service and Delay 7
Table 2 Trip Generation 15
Table 3 Analysis Summary of North Main Street & Progress Street/McDonald Street 22
Table 3A Queuing Summary of North Main Street & Progress Street/McDonald Street 23
Table 4 Analysis Summary of North Main Street & Patrick Henry Drive 24
Table 4A Queuing Summary of North Main Street & Patrick Henry Drive 24
Table 5 Analysis Summary of North Main Street & Montgomery Street NW 25
Table 5A Queuing Summary of North Main Street & Montgomery Street NW 26
Table 6 Analysis Summary of North Main Street & YMCA Access/Site Access 27
Table 6A Queuing Summary of North Main Street & YMCA Access/Site Access 27
Table 7 Analysis Summary of North Main Street & Lucas Drive 29
Table 7A Queuing Summary of North Main Street & Lucas Drive 29
Table 8 Analysis Summary of Montgomery Street NW & Site Access 30
Table 8A Queuing Summary of Montgomery Street NW & Site Access 30

LIST OF FIGURES

Figure 1 Site Location Map 3
Figure 2 Site Plan 5
Figure 3 Existing Geometrics and Traffic Control 6
Figure 4 Existing (2018) Traffic Volumes 9
Figure 5 Projected (2020) Traffic Volumes 11
Figure 6 Approved Development Traffic Volumes 12
Figure 7 No-Build (2020) Traffic Volumes 13
Figure 8 Site Trip Distribution (Supermarket/Retail) 17
Figure 9 Site Trip Distribution (Student Housing) 18
Figure 10 Total Site Trip Assignment 19
Figure 11 Future Traffic Adjustments 20
Figure 12 Build (2020) Traffic Volumes 21
Figure 13 Proposed Lane Configurations 32

TECHNICAL APPENDIX

Appendix A	Traffic Count Data
Appendix B	Signal Phasing and Timing Data
Appendix C	Approved Development Data
Appendix D	VDOT Turn Lane Warrant Charts
Appendix E	Capacity Analysis Reports
Appendix F	Queuing Analysis Reports

TRAFFIC IMPACT ANALYSIS REPORT
THE STANDARD AT BLACKSBURG
BLACKSBURG, VIRGINIA

1. INTRODUCTION

This report summarizes the findings of the Traffic Impact Analysis (TIA) that was performed for the proposed redevelopment of the property located on west side of North Main Street between Montgomery Street NW and Broce Drive in Blacksburg, Virginia. The purpose of this study is to evaluate the current traffic conditions at the study intersections, estimate the trip generation potential of the proposed development, and determine what mitigation measures, if any, are needed to accommodate the projected traffic volumes.

1.1. Executive Summary

The proposed redevelopment is to be located on the west side of North Main Street [between Montgomery Street NW and Broce Drive] in Blacksburg, Virginia. At build out, the proposed site is expected to consist of a student housing facility with up to 825 beds and 17,800 square feet of commercial space. If approved, the development is expected to be complete and occupied for Virginia Tech's 2020-21 academic school year.

Access is to be provided via one (1) new full movement connection on North Main Street [located in the vicinity of the YMCA access] in addition to one (1) full movement connection on Montgomery Street [located approximately 575 feet west of North Main Street]. Distance is measured center-to-center.

The study area developed through coordination with the Town consists of the following intersections:

- North Main Street and Progress Street/McDonald Street - Signalized
- North Main Street and Patrick Henry Drive - Signalized
- North Main Street and Montgomery Street NW - Unsignalized
- North Main Street and YMCA Access/Site Access - Unsignalized
- North Main Street and Lucas Drive - Unsignalized
- Full Access on Montgomery Street NW - Unsignalized

The study intersections were analyzed during the weekday AM and PM peak hours under the following traffic scenarios:

- Existing (2018) traffic conditions
- Future (2020) 'No-Build' traffic conditions
- Future (2020) 'Build' traffic conditions

Based on the results of the traffic impact analysis, no mitigation measures were identified as the traffic generated by the proposed development is not expected to have a significant impact on the study area.

1.2. Site Location and Study Area

The proposed redevelopment is to be located on the west side of North Main Street [between Montgomery Street NW and Broce Drive] in Blacksburg, Virginia. Through coordination with the Town, it was determined that the study area would consist of the following intersections:

- North Main Street and Progress Street/McDonald Street - Signalized
- North Main Street and Patrick Henry Drive - Signalized
- North Main Street and Montgomery Street NW - Unsignalized
- North Main Street and YMCA Access/Site Access - Unsignalized
- North Main Street and Lucas Drive - Unsignalized
- Site Access on Montgomery Street NW - Unsignalized

Refer to Figure 1 for the site location map.

1.3. Existing Land Uses

A mixture of residential and commercial land uses currently exist on the site, with a total of seven (7) access connections located along North Main Street.

1.4. Proposed Land Uses and Access

At build out, the proposed site is expected to consist of up to a 825-bed student housing facility and 17,800 square feet of commercial space [assumed to be a 13,800 square foot supermarket and 4,000 square feet of general retail space]. If approved, the development is expected to be complete and occupied for Virginia Tech's 2020-21 academic school year.

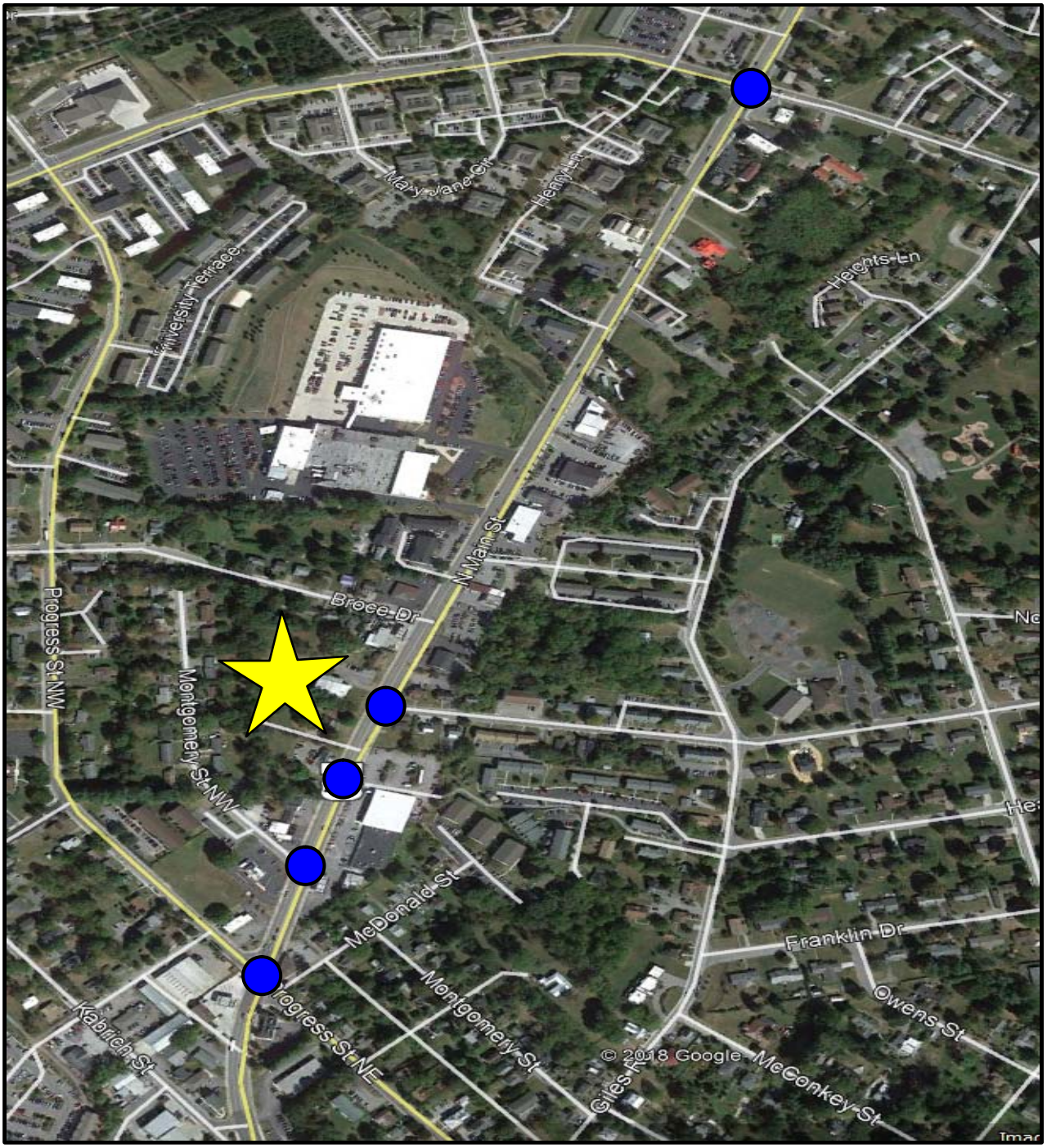

LEGEND

Site Location

Existing Study Intersection

N

RAMEY KEMP & ASSOCIATES
TRANSPORTATION ENGINEERS

The Reserve at Blacksburg
Blacksburg, Virginia

Site Location Map

	Not to Scale	Figure 1

Access is to be provided via one (1) new left-over connection on North Main Street [located in the vicinity of the YMCA access], thereby reducing the number of access connections along North Main Street for this site by six (6). In addition, a new full movement connection is to be provided on Montgomery Street NW [approximately 575 feet west of North Main Street]. Distance is measured center-to-center. Refer to Figure 2 for the site plan.

1.5. Existing Roadway Network

North Main Street is a four-lane facility with a posted speed limit of 35 miles per hour (mph) within the study area. Based on 2017 VDOT Annual Average Daily Traffic (AADT) estimates, North Main Street carries approximately 16,000 vehicles per day between Progress Street and Patrick Henry Drive.

Progress Street is a two-lane facility with a posted speed limit of 25 mph within the study area. Based on 2017 VDOT AADT estimate, Progress Street carries approximately 3,800 vpd [west of North Main Street] and 1,100 vpd [east of North Main Street], respectively.

Patrick Henry Drive is a four-lane facility [west of North Main Street] and a two-lane facility [east of North Main Street] with a posted speed limit of 25 mph within the study area. Based on 2017 VDOT AADT estimate, Patrick Henry Drive carries approximately 3,800 vpd east of North Main Street.

Existing lane configurations (number of traffic lanes on the intersection approach), lane widths, storage capacities, and other intersection and roadway information within the study area was collected through field reconnaissance by Ramey Kemp and Associates, Inc. (RKA). Refer to Figure 3 for an illustration of the existing geometrics and traffic control at the study intersections.

2. TRAFFIC ANALYSIS PROCEDURE

All study intersections were analyzed using the methodology outlined in the Highway Capacity Manual (HCM) published by the Transportation Research Board. The computer software package, Synchro (Version 10.2), was used to complete all analyses. Synchro was developed

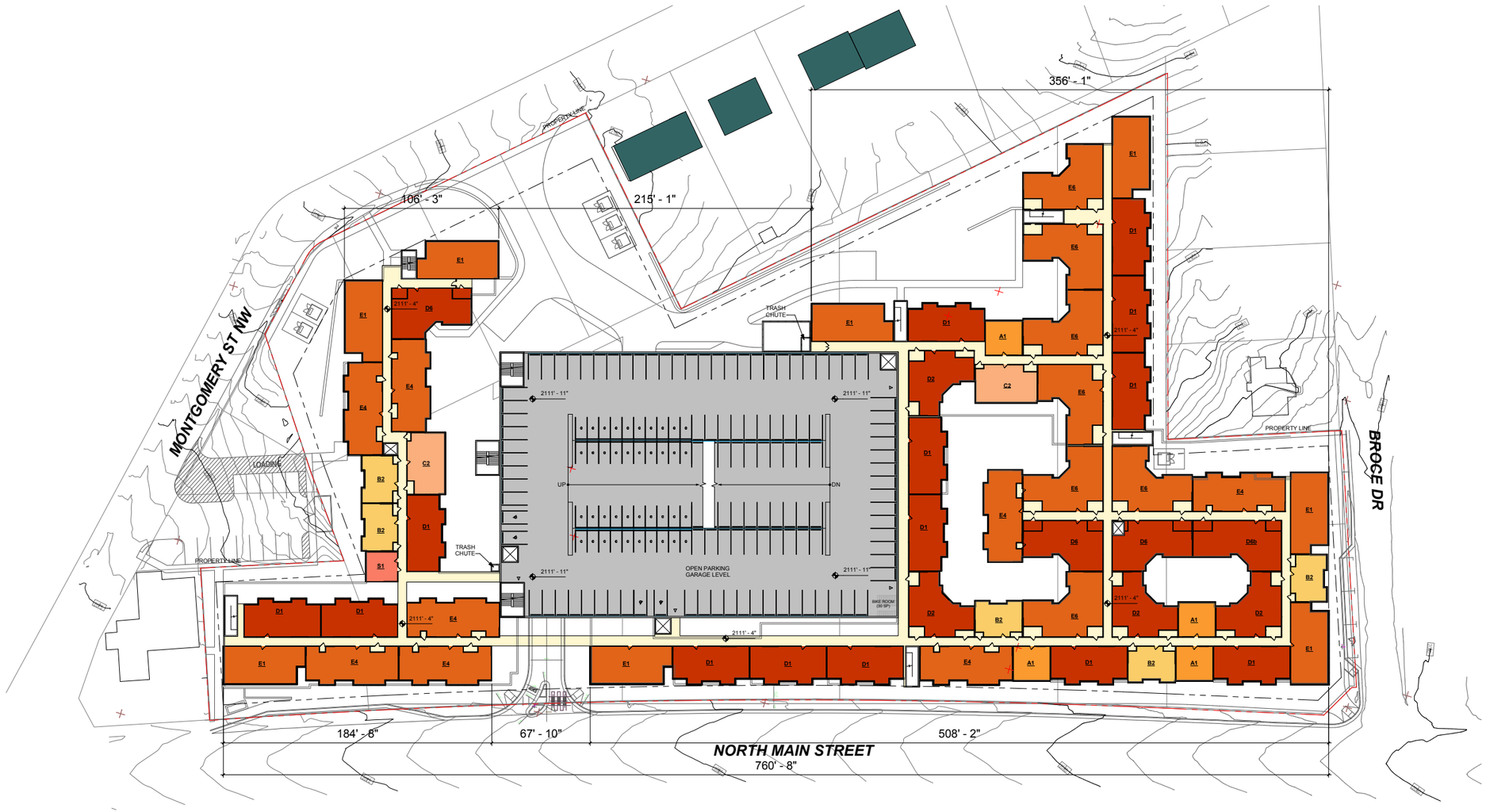

1 LEVEL 4 OVERALL PLAN
1" = 30'-0"

0' 15' - 0" 30' - 0" 60' - 0"

RAMEY KEMP & ASSOCIATES
TRANSPORTATION ENGINEERS

The Standard at Blacksburg
Blacksburg, Virginia

Site Plan

Scale: Not to Scale | Figure 2

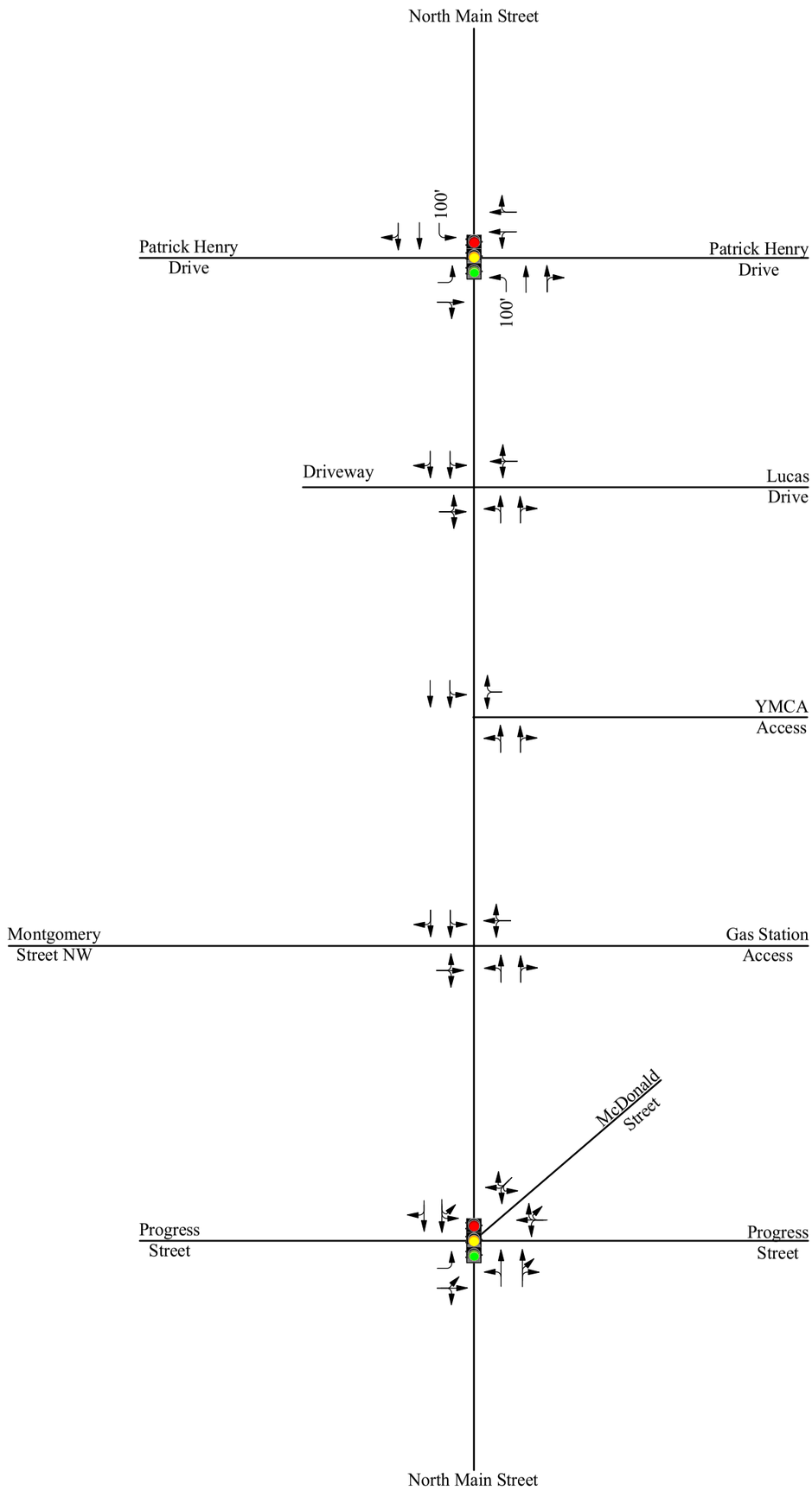

LEGEND

Signalized Intersection

X'→ Lane Configuration and Storage Length (in feet)

N

RAMEY KEMP & ASSOCIATES
TRANSPORTATION ENGINEERS

The Reserve at Blacksburg
Blacksburg, Virginia

Existing Geometrics and Traffic Control

Not to Scale | Figure 3

by Trafficware Corporation and allows the user to input data into the Synchro software and calculate the output based on methodologies in the HCM.

The HCM defines capacity as "the maximum hourly rate at which persons or vehicles can reasonably be expected to traverse a point or uniform section of a lane or roadway during a given time period under prevailing roadway, traffic, and control condition." Level of service (LOS) is a term used to represent different driving conditions, and is defined as a "qualitative measure describing operational conditions within a traffic stream, and their perception by motorists and/or passenger." Level of service varies from Level "A", representing free flow, to Level "F", where greater vehicle delays are evident.

For signalized intersections, Synchro calculates the average control delay and LOS for each lane group as well as the overall intersection. For unsignalized intersections, Synchro calculates the average control delay for stop-controlled movements, but does not provide an overall LOS for the intersection.

Refer to Table 1 for HCM levels of service and related average control delay per vehicle. Control delay as defined by the HCM includes "initial deceleration delay, queue move-up time, stopped delay, and final acceleration delay." As shown in Table 1, an average control delay of 40 seconds at a signalized intersection results in LOS D operation.

TABLE 1
HIGHWAY CAPACITY MANUAL – LEVELS OF SERVICE AND DELAY

SIGNALIZED INTERSECTION		UNSIGNALIZED INTERSECTION	
LEVEL OF SERVICE	CONTROL DELAY PER VEHICLE (SECONDS)	LEVEL OF SERVICE	CONTROL DELAY PER VEHICLE (SECONDS)
A	0-10	A	0-10
B	10-20	B	10-15
C	20-35	C	15-25
D	35-55	D	25-35
E	55-80	E	35-50
F	>80	F	>50

In order to identify potential storage deficiencies for existing turn lanes at the study intersections and determine the minimum storage required for newly warranted turn lanes, the queue lengths at the intersections under evaluated under future traffic conditions. The queue

lengths reported at the study intersections are the maximum queue lengths calculated by SimTraffic and are based on an average of ten (10) simulation runs.

3. EXISTING TRAFFIC CONDTIONS

Existing traffic volumes were obtained from 13-hour turning movement counts that were conducted at the study intersections on a Tuesday and Wednesday from 6:00 AM to 7:00 PM while Virginia Tech and other schools were in session, with the higher peak hour intersection count of the two days utilized for the traffic analysis. Please note that the existing traffic volumes were balanced upwards between intersections. Refer to Figure 4 for an illustration of the existing traffic volumes. A copy of the traffic count data can be found in Appendix A.

3.1. Analysis of Existing (2018) Peak Hour Traffic Conditions

In order to determine the current delays and operating levels of service at the study intersections, the existing (2018) traffic volumes (Figure 4) were analyzed under existing lane configurations and traffic control conditions. A peak hour factor (PHF) of 0.92 was utilized for all analyses to model the traffic conditions in an urban setting. Under all traffic conditions, the signalized intersections were analyzed utilizing the signal phasing and timing data obtained from the Town and their consultant, and are located in Appendix B. Cycle lengths were optimized for the four-phase signal [of North Main Street and Progress Street/McDonald Street] and the six-phase signal [of North Main Street and Patrick Henry Drive] and may vary between existing and future traffic conditions. The results of the analysis are presented in Section 8 of this report.

4. 'NO-BUILD' TRAFFIC CONDITIONS

In order to determine the traffic impact of the proposed redevelopment, a comparison of the future conditions of the study intersections must be made. This is done by analyzing the future build out year (2020) without and with the traffic generated by the proposed redevelopment. The future year condition without the development is referred to as the 'no-build' condition and is determined by projecting the existing traffic to the build out year using a compounded annual growth rate.

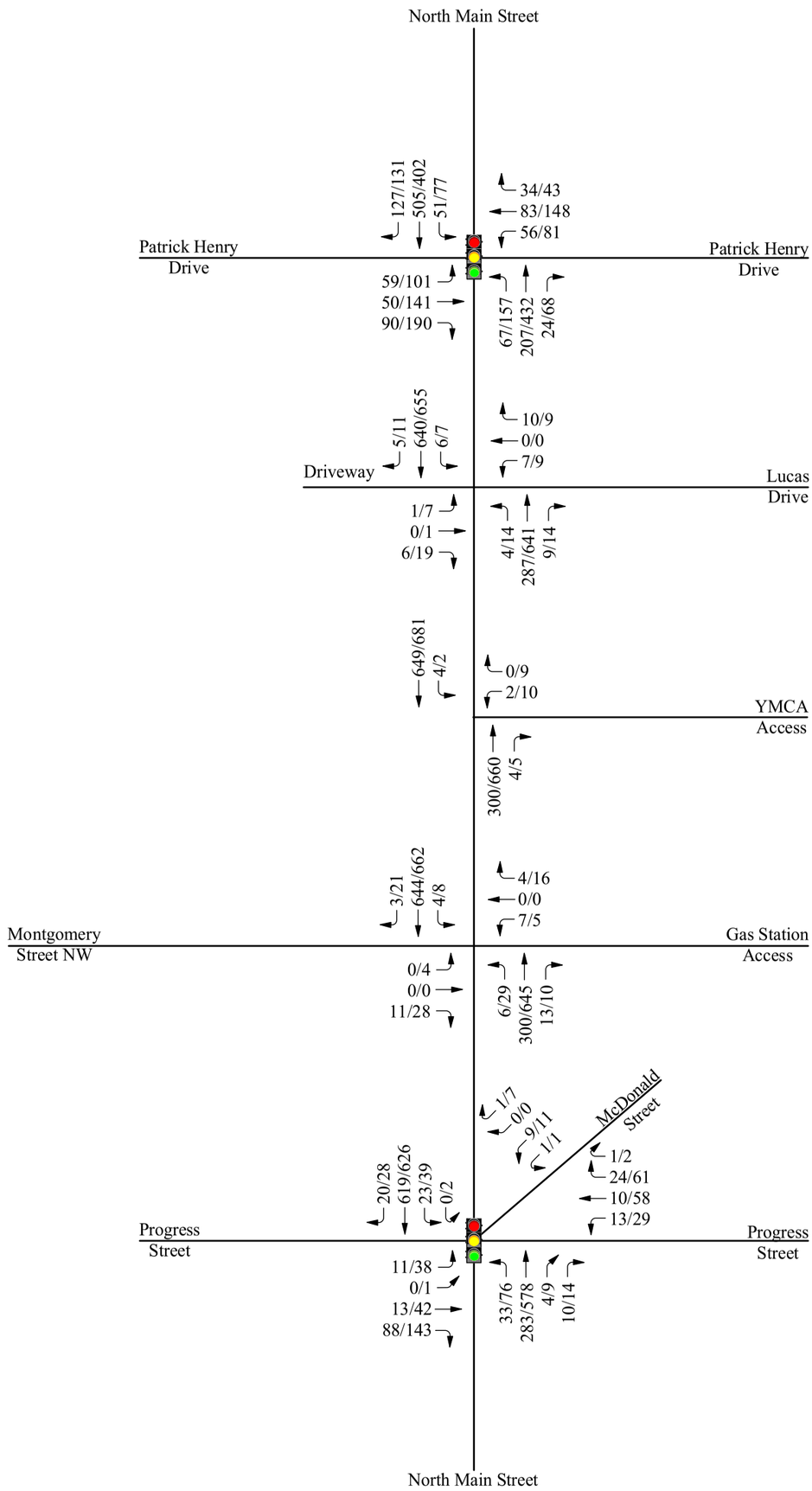

LEGEND

Signalized Intersection

X/Y AM/PM Peak Hour Traffic

N

RAMEY KEMP & ASSOCIATES
TRANSPORTATION ENGINEERS

The Reserve at Blacksburg
Blacksburg, Virginia

Existing (2018)
Traffic Volumes

Not to Scale | Figure 4

4.1. Background Traffic Growth

In order to account for the growth of traffic and subsequent traffic conditions at a future year, background traffic projections are needed. Background traffic is the component of traffic due to the growth of the community and surrounding area that is anticipated to occur regardless of whether the site is developed. An annual growth rate of 0.5% [approved by the Town] was applied to the existing traffic volumes. Refer to Figure 5 for an illustration of the projected (2020) peak hour traffic volumes.

4.2. Adjacent Development Traffic

Based on coordination with the Town, it is understood that there is one (1) approved development in the vicinity of the site that is expected to affect the study area: 1222 Patrick Henry PRD. The site generated traffic from the traffic study that was sealed and submitted by Balzer & Associates on November 20, 2018 was included under all future traffic conditions. Refer to Figure 6 for an illustration of the approved development traffic volumes. Refer to Appendix C for the approved development information.

4.3. Future (2020) 'No-Build' Peak Hour Traffic Conditions

The future (2020) 'no-build' peak hour traffic volumes were determined by adding the approved development traffic volumes (Figure 6) and the projected (2020) traffic volumes (Figure 5). Refer to Figure 7 for an illustration of the future (2020) 'no-build' peak hour traffic volumes.

4.4. Analysis of Future (2020) 'No-Build' Peak Hour Traffic Conditions

Utilizing the future (2020) 'no-build' traffic volumes (Figure 7), the study intersections were analyzed using the same methodology as previously discussed for the existing traffic conditions. The results of the future (2020) 'no-build' analysis are presented in Section 8 of this report.

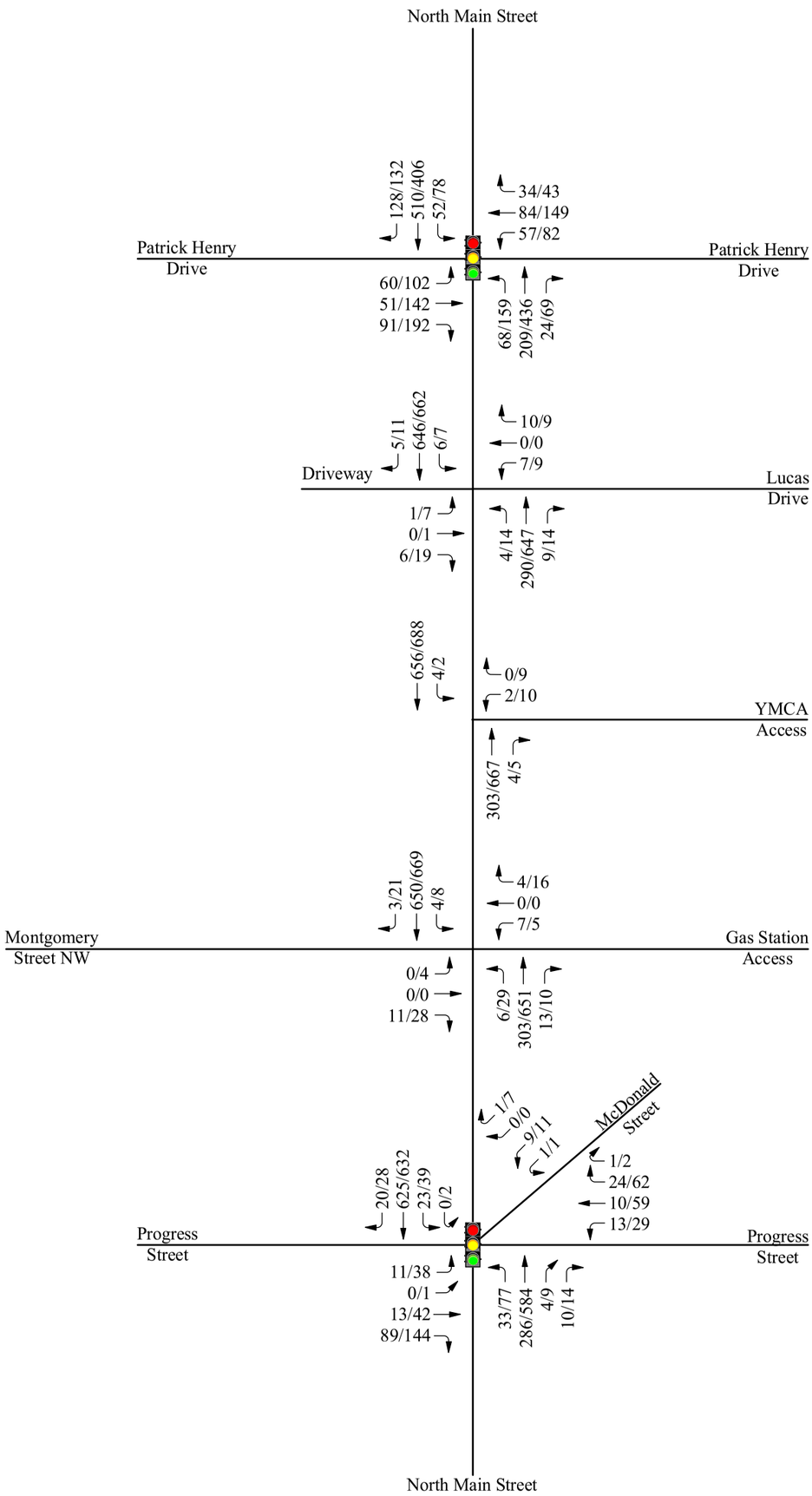

LEGEND

Signalized Intersection

X/Y AM/PM Peak Hour Traffic

N

RAMEY KEMP & ASSOCIATES
TRANSPORTATION ENGINEERS

The Reserve at Blacksburg
Blacksburg, Virginia

Projected (2020)
Traffic Volumes

Not to Scale | Figure 5

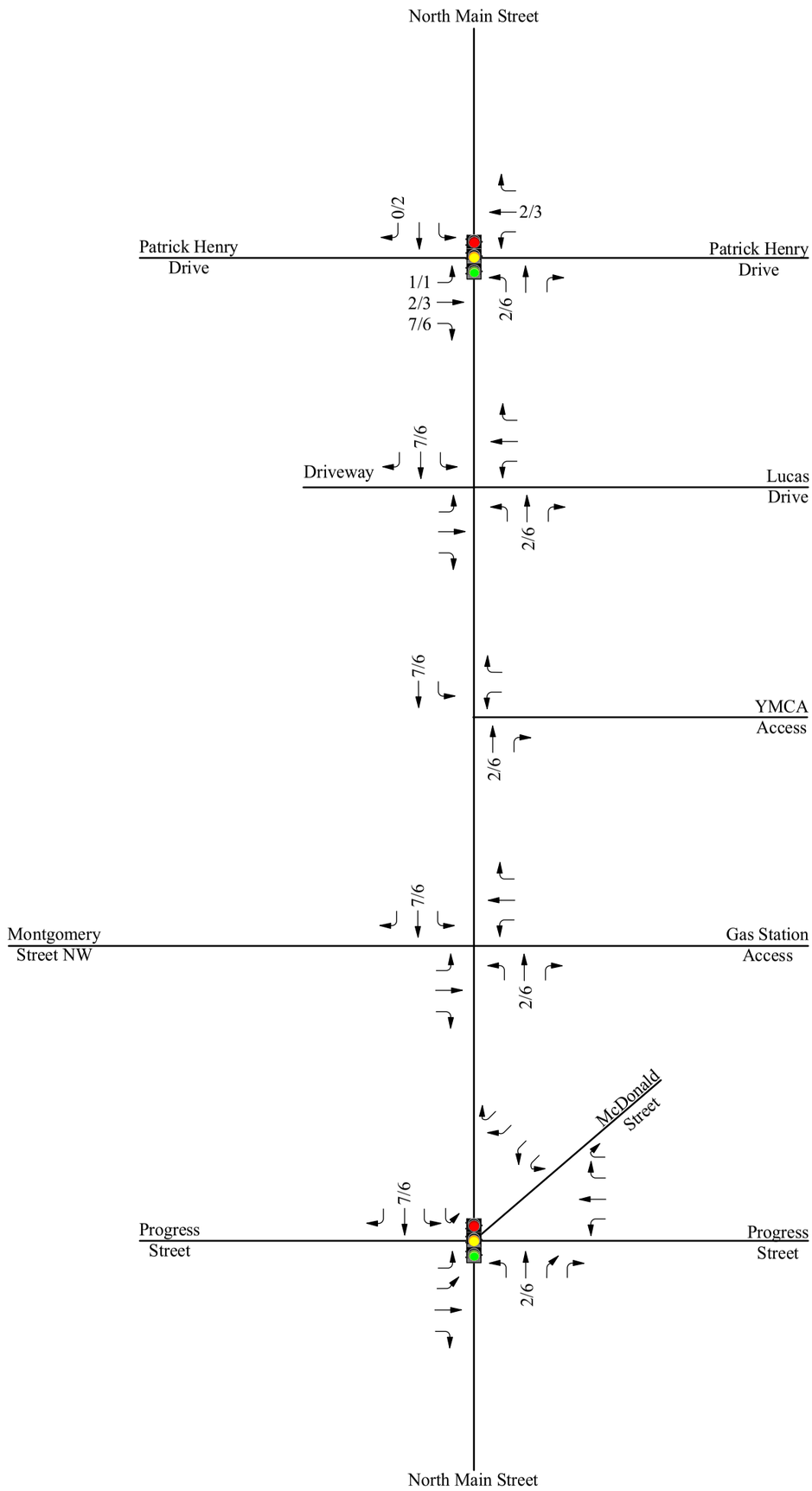

LEGEND

Signalized Intersection

X/Y AM/PM Peak Hour Traffic

N

RAMEY KEMP & ASSOCIATES
TRANSPORTATION ENGINEERS

The Reserve at Blacksburg
Blacksburg, Virginia

Approved Development
Traffic Volumes

Not to Scale | Figure 6

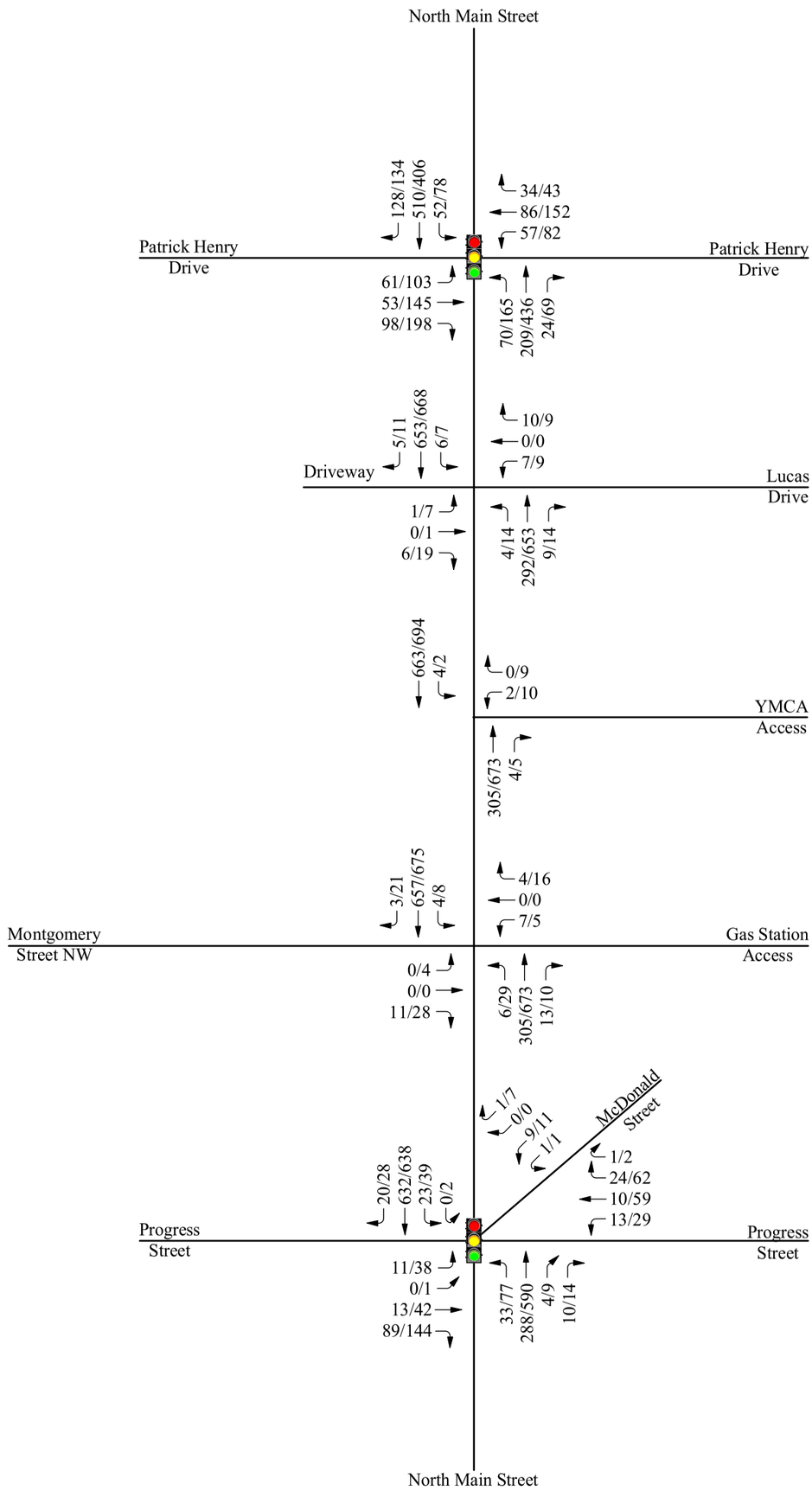

LEGEND

Signalized Intersection

X/Y AM/PM Peak Hour Traffic

N

RAMEY KEMP & ASSOCIATES
TRANSPORTATION ENGINEERS

The Reserve at Blacksburg
Blacksburg, Virginia

No-Build (2020)
Traffic Volumes

Not to Scale | Figure 7

5. PROJECT TRAFFIC

5.1. Trip Generation

At build out, the proposed redevelopment is expected to consist of an 825-bed student housing facility and 17,800 square feet of commercial space [assumed to be a 13,800 square foot supermarket and 4,000 square feet of general retail space]. The average weekday daily trips as well as AM and PM peak hour peak hour site trips for this analysis were calculated utilizing the 10th Edition of the Institute of Transportation Engineers (ITE) *Trip Generation* Manual. Traffic was generated according to the peak hour of adjacent street traffic utilizing the number of beds [for the student housing located over a ½ mile from campus] and square footage [for the supermarket and retail space] as the independent variables.

Trips were generated utilizing equations for the student housing [daily and AM/PM peak hours] and retail land use [daily and PM peak hour only] and rates for the supermarket [daily and AM/PM peak hours]. Due to unreasonably high trip generation [when using equations – 154 total trips] and low trip generation [when using rates – 4 total trips] during the AM peak hour for the size of retail space that is being proposed, the PM peak hour trip generation was assumed for the AM peak hour for the purpose of this analysis.

It is estimated that the proposed redevelopment could generate 5,444 trips (entering and exiting) during a typical weekday. The development could generate up to 226 trips (86 entering and 140 exiting) during the AM peak hour and 432 trips (221 entering and 211 exiting) during the PM peak hour. However, due to the proximity of the development to the Virginia Tech campus, and the idea that not all students have vehicles available, a reduction in the trips generated by the student housing was assumed to account for those riding transit. For the purpose of this analysis, the student housing traffic was reduced by 25% [approved by the Town] to account for transit usage.

With adjustments made to account for transit usage, the proposed redevelopment is expected to generate 193 trips (77 entering and 116 exiting) during the AM peak hour and 368 trips (188 entering and 180 exiting) during the PM peak hour.

Please note that a conservative approach was taken when generating trips for the proposed redevelopment, and no reduction in traffic via internal capture or pass-by trips were assumed although both could be expected based on the land uses being proposed. In addition, the trip generation was not reduced to account for traffic that is currently generated by the existing land uses located on the site. Refer to Table 2 for a breakdown of the trip generation results for the proposed redevelopment.

TABLE 2
TRIP GENERATION

ITE LAND USE (ITE Code)	DENSITY	DAILY VOLUME	AM PEAK HOUR (vph)		PM PEAK HOUR (vph)	
			Enter	Exit	Enter	Exit
Off-Campus Housing - Over ½ Mile from Campus (225)	825 beds	3,296	37	97	132	122
Supermarket (850)	13,800 square feet	1,474	25	17	65	63
Retail (820)	4,000 square feet	674	24	26	24	26
Total		5,444	86	140	221	211
Transit Reduction (Assumed 25% of Off-Campus Housing)			*9*	*24*	*33*	*31*
Vehicle Trips			**77**	**116**	**188**	**180**

6. SITE TRIP DISTRIBUTION AND ASSIGNMENT

The primary site trip distribution [accepted by the Town] for the proposed development was determined based on a review of the existing traffic patterns and engineering judgment, and are summarized below:

<u>Supermarket/Retail</u>

- 39% to/from the north via North Main Street
- 20% to/from the south via North Main Street
- 10% to/from the west via Progress Street

- 5% to/from the east via Progress Street
- 15% to/from the west via Patrick Henry Drive
- 10% to/from the east via Patrick Henry Drive
- 1% to/from the east via Lucas Drive

Student Housing

- 10% to/from the north via North Main Street
- 90% to/from the south via North Main Street

Refer to Figures 8-10 for illustrations of the site trip distribution and the total site trip assignment.

7. 'BUILD' TRAFFIC CONDITIONS

'Build' traffic represents the future build out year of a development. It is typically determined by combining the 'no-build' and site traffic. However, the existing driveway located across from Lucas Drive will be removed as part of the redevelopment. Therefore, traffic volumes associated with this connection were removed from the study area. Refer to Figure 11 for an illustration of the traffic adjustments.

7.1. Proposed 'Build' (2020) Peak Hour Traffic Conditions

Future (2020) 'build' conditions were determined by adding the site-generated traffic volumes (Figure 10), traffic adjustments (Figure 11), and the future (2020) 'no-build' traffic volumes (Figure 7). Refer to Figure 12 for an illustration of the future (2020) 'build' traffic volumes with the development built-out.

7.2. Analysis of Future (2020) 'Build' Peak Hour Traffic Conditions

The study intersections were analyzed with the future (2020) 'build' traffic volumes (Figure 12), using the same methodology as previously discussed for existing and 'no-build' traffic conditions. The results are presented in Section 8 of this report.

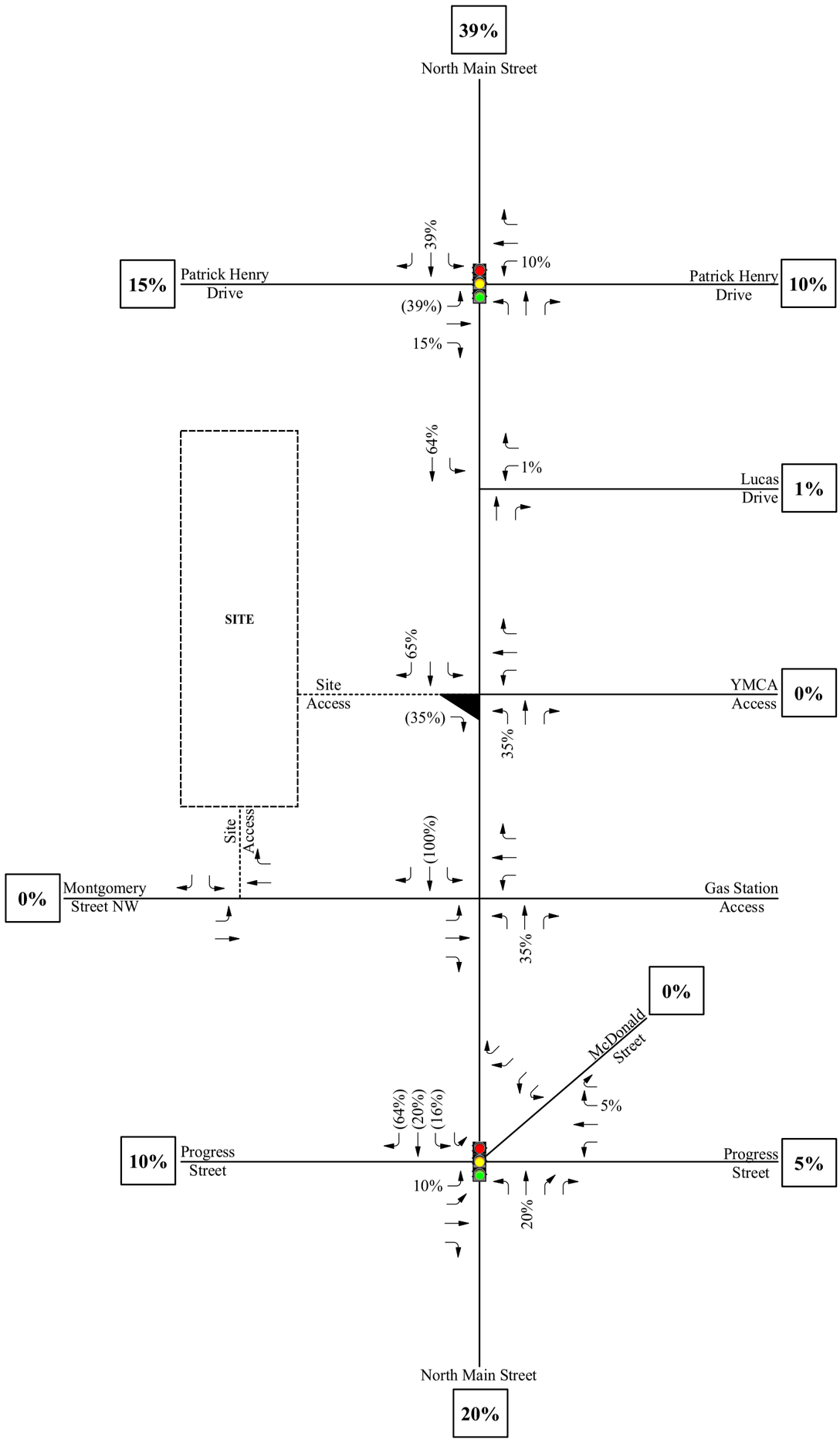

LEGEND

Signalized Intersection

Leftover Intersection

X% (Y%) Entering (Exiting) Peak Hour Site Traffic

RAMEY KEMP & ASSOCIATES
TRANSPORTATION ENGINEERS

The Reserve at Blacksburg
Blacksburg, Virginia

Site Trip Distribution
(Supermarket/Retail)

Not to Scale | Figure 8

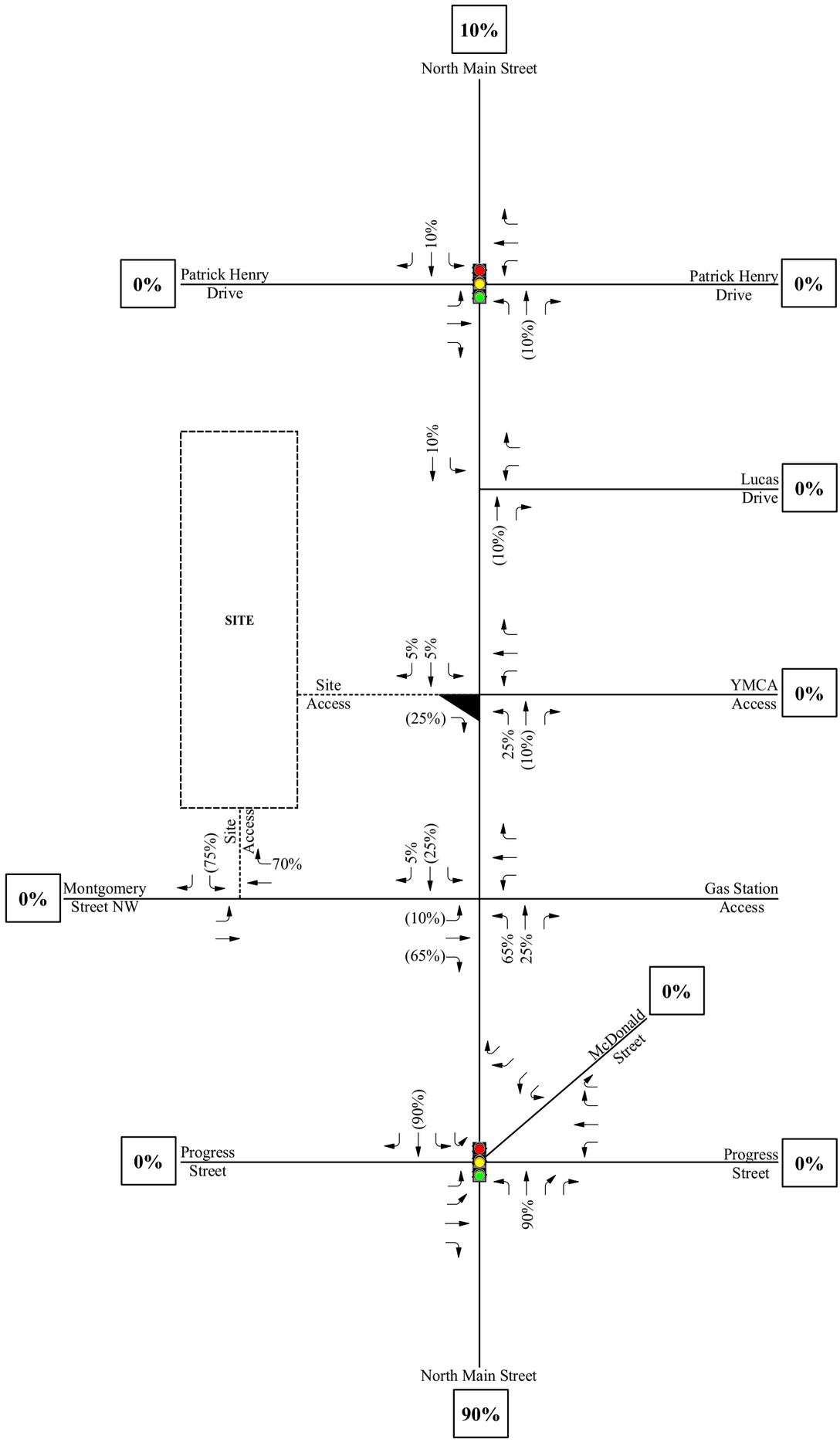

LEGEND

Signalized Intersection

Leftover Intersection

X% (Y%) Entering (Exiting) Peak Hour Site Traffic

N

RAMEY KEMP & ASSOCIATES
TRANSPORTATION ENGINEERS

The Reserve at Blacksburg
Blacksburg, Virginia

Site Trip Distribution
(Student Housing)

Not to Scale | Figure 9

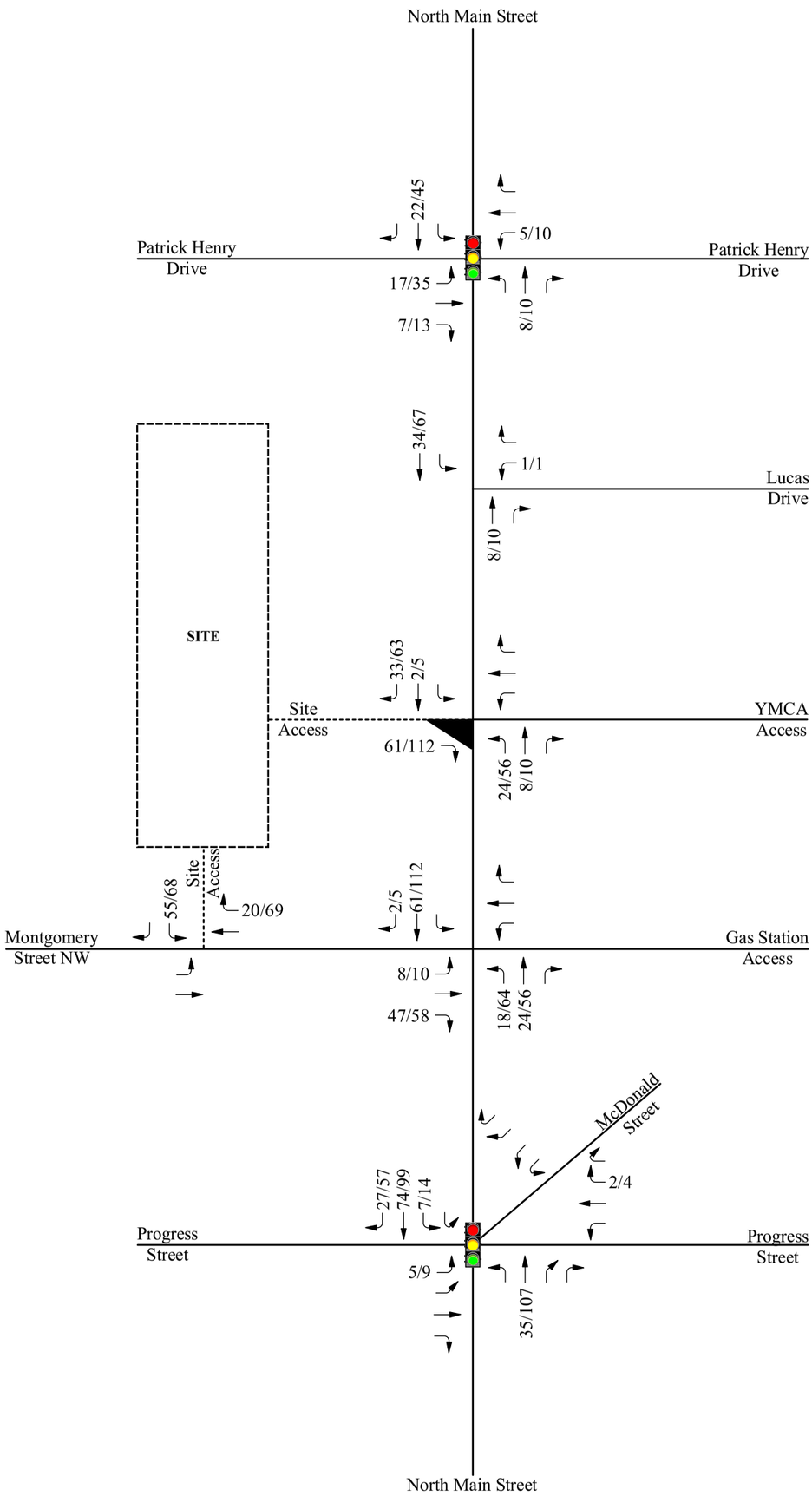

LEGEND

Signalized Intersection

Leftover Intersection

X/Y AM/PM Peak Hour Site Traffic

N

RAMEY KEMP & ASSOCIATES
TRANSPORTATION ENGINEERS

The Reserve at Blacksburg
Blacksburg, Virginia

Total Site Trip Assignment

Not to Scale | Figure 10

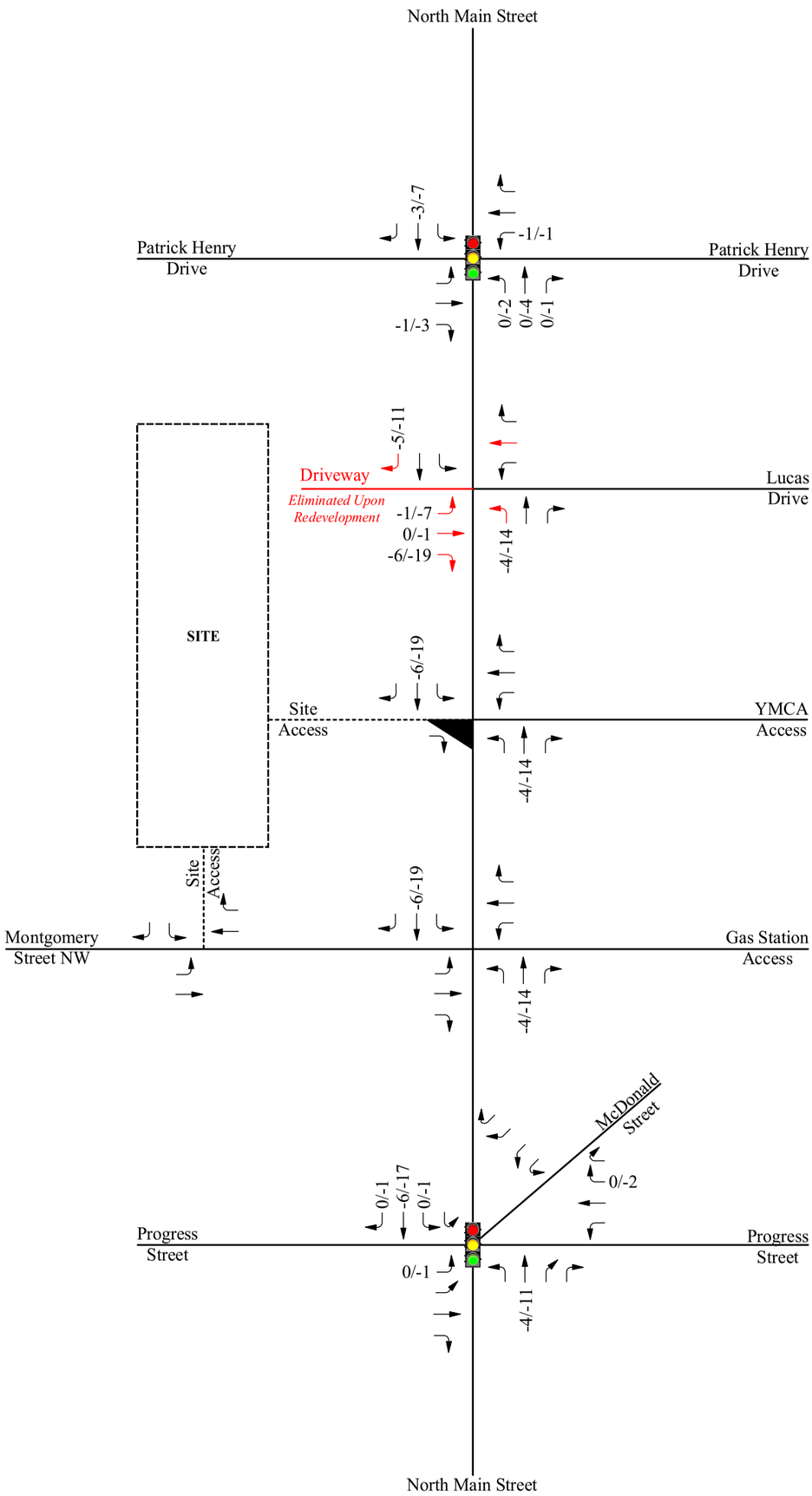

LEGEND

Signalized Intersection

Eliminated Movement Upon Redevelopment

Leftover Intersection

X/Y AM/PM Peak Hour Traffic Adjustments

N

RAMEY KEMP & ASSOCIATES
TRANSPORTATION ENGINEERS

The Reserve at Blacksburg
Blacksburg, Virginia

Future Traffic Adjustments

Not to Scale | Figure 11

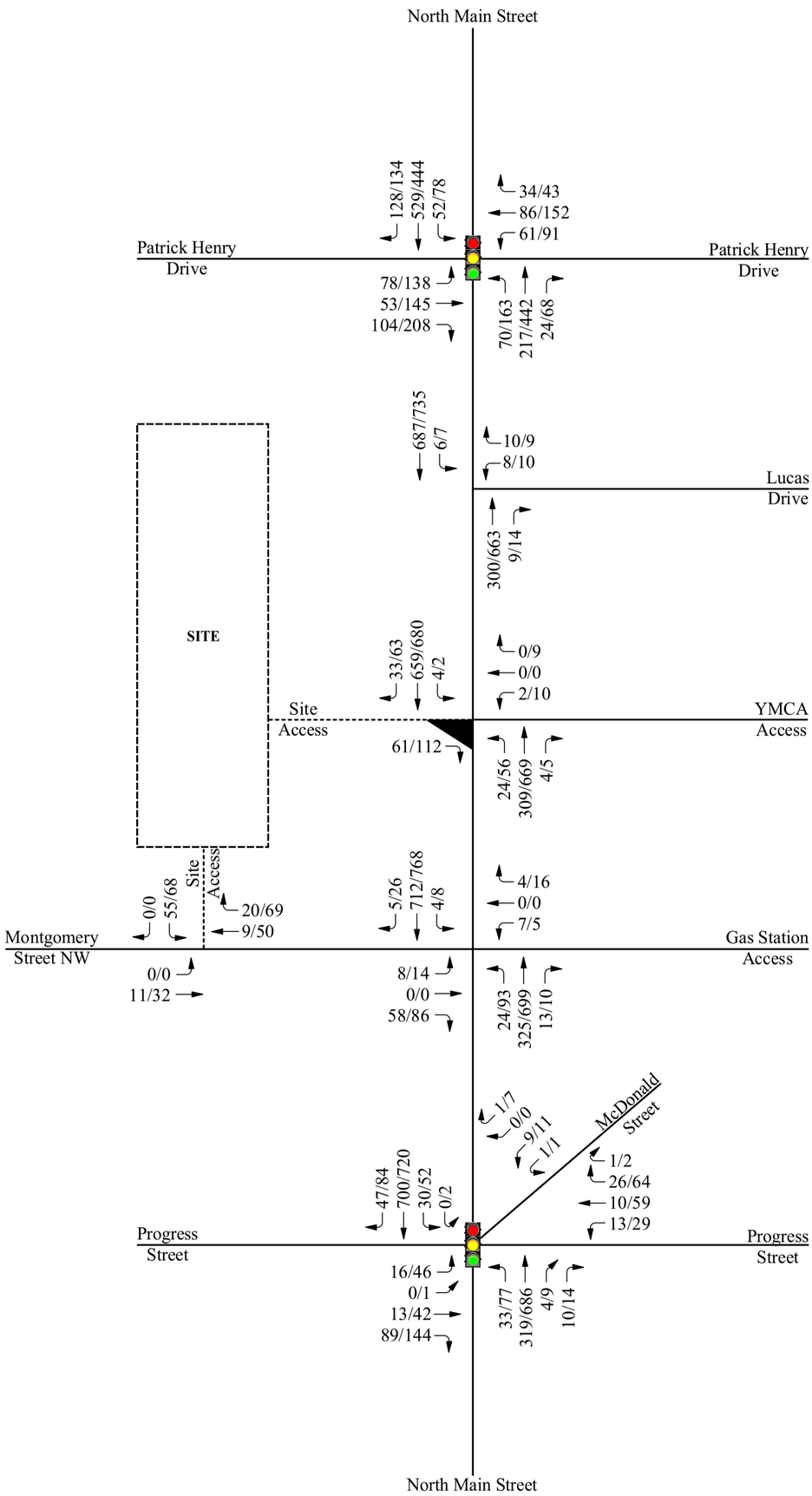

LEGEND

Signalized Intersection

Leftover Intersection

X/Y AM/PM Peak Hour Site Traffic

N

RAMEY KEMP & ASSOCIATES
TRANSPORTATION ENGINEERS

The Reserve at Blacksburg
Blacksburg, Virginia

Build (2020)
Traffic Volumes

Not to Scale | Figure 12

8. CAPACITY ANALYSIS

8.1. North Main Street and Progress Street/McDonald Street

Under existing traffic conditions, capacity analysis indicates that the intersection operates at an overall LOS A during the AM peak hour and LOS B during the PM peak hour. In addition, all lane groups operate at LOS C or better. Under future traffic conditions, capacity analysis indicates that the intersection is expected to operate at an overall LOS A during the AM peak hour and LOS B during the PM peak hour. In addition, all lane groups are expected to operate at LOS C or better. Refer to Table 3 for a summary of the capacity analysis results for this signalized intersection. Copies of the Synchro capacity analysis reports are located in Appendix E.

TABLE 3
ANALYSIS SUMMARY OF NORTH MAIN STREET & PROGRESS STREET/MCDONALD STREET [SIGNALIZED]

TRAFFIC SCENARIO	LANE GROUP	AM PEAK HOUR			PM PEAK HOUR		
		Lane LOS	Delay (s)	Overall LOS (Delay)	Lane LOS	Delay (s)	Overall LOS (Delay)
Existing (2018) Conditions	NBL/T/R	A	6.9	A (8.0)	A	9.0	B (10.8)
	SBL/T/R	A	7.7		A	8.4	
	EBL	B	16.5		C	22.0	
	EBT/R	A	7.4		B	10.9	
	WBL/T/R	B	16.6		C	25.0	
	SWBL/T/R	B	17.3		C	22.8	
No-Build (2020) Conditions	NBL/T/R	A	6.9	A (8.0)	B	11.0	B (12.7)
	SBL/T/R	A	7.7		B	10.1	
	EBL	B	16.6		C	24.9	
	EBT/R	A	7.5		B	12.1	
	WBL/T/R	B	16.7		C	28.7	
	SWBL/T/R	B	17.5		C	25.4	
Build (2020) Conditions	NBL/T/R	A	6.5	A (8.0)	B	13.0	B (14.4)
	SBL/T/R	A	7.6		B	12.1	
	EBL	B	18.4		C	28.9	
	EBT/R	A	8.1		B	12.9	
	WBL/T/R	B	18.4		C	30.3	
	SWBL/T/R	B	19.2		C	32.6	

Based on a review of the maximum queuing results that are based on the average results of ten (10) simulation runs, no queuing problems were identified. When compared to the 'no-build' traffic conditions, the queue lengths under 'build' conditions are not expected to increase by more than 40 feet [or approximately 2 vehicles] except for the northbound lanes during the PM peak hour. However, the conditions for the northbound lanes are not expected to be the norm with average queues expected to be 210 feet or less. Refer to Table 3A for a summary of the

queuing analysis results for this signalized intersection. Copies of the SimTraffic queuing analysis reports are located in Appendix F.

TABLE 3A
QUEUING SUMMARY OF NORTH MAIN STREET & PROGRESS STREET/MCDONALD STREET

LANES	EXISTING		NO-BUILD		BUILD		DIFFERENCE	
	AM Peak	PM Peak	AM Peak	PM Peak	AM Peak	PM Peak	AM Peak	PM Peak
EBL	22	67	20	64	36	81	16	17
EBLTR	62	146	75	168	72	178	-3	10
WBLTR	56	188	71	190	69	162	-2	-28
NBLT	111	222	134	235	153	419	19	184
NBTR	87	186	87	212	124	400	37	188
SBLT	148	161	165	167	162	213	-3	46
SBTR	147	170	162	182	170	222	8	40
SWBLTR	41	51	34	54	36	54	2	0

Based on the capacity and queuing analysis results, no mitigation measures are recommended to accommodate the proposed development traffic at this intersection.

8.2. North Main Street and Patrick Henry Drive

Under existing traffic conditions, capacity analysis indicates that the intersection operates at an overall LOS B during the AM peak hour and LOS C during the PM peak hour. In addition, all lane groups operate at LOS D or better. Under future traffic conditions, capacity analysis indicates that the intersection is expected to operate at an overall LOS C or better during the peak hours. In addition, all lane groups are expected to operate at LOS D or better. Refer to Table 4 for a summary of the capacity analysis results for this signalized intersection. Copies of the Synchro capacity analysis reports are located in Appendix E.

Based on a review of the maximum queuing results that are based on the average results of ten (10) simulation runs, no queuing problems were identified. When compared to the 'no-build' traffic conditions, the queue lengths under 'build' conditions are not expected to increase by more than 105 feet [or approximately 4 vehicles]. Refer to Table 4A for a summary of the queuing analysis results for this signalized intersection. Copies of the SimTraffic queuing analysis reports are located in Appendix F.

TABLE 4
ANALYSIS SUMMARY OF NORTH MAIN STREET & PATRICK HENRY DRIVE
[SIGNALIZED]

TRAFFIC SCENARIO	LANE GROUP	AM PEAK HOUR			PM PEAK HOUR		
		Lane LOS	Delay (s)	Overall LOS (Delay)	Lane LOS	Delay (s)	Overall LOS (Delay)
Existing (2018) Conditions	NBL	B	10.8	B (19.3)	C	22.9	C (28.3)
	NBT/R	B	15.1		C	25.9	
	SBL	A	9.9		B	17.5	
	SBT/R	C	20.1		C	27.1	
	EBL	C	29.1		C	27.4	
	EBT/R	B	19.0		D	35.5	
	WBL/T/R	C	25.2		C	32.9	
No-Build (2020) Conditions	NBL	B	11.2	B (19.7)	C	24.3	C (28.9)
	NBT/R	B	15.4		C	26.1	
	SBL	B	10.2		B	17.7	
	SBT/R	C	20.3		C	27.3	
	EBL	C	29.1		C	27.6	
	EBT/R	C	20.1		D	36.8	
	WBL/T/R	C	25.7		C	33.5	
Build (2020) Conditions	NBL	B	11.3	C (20.1)	C	25.8	C (30.0)
	NBT/R	B	15.5		C	26.4	
	SBL	B	10.3		B	18.0	
	SBT/R	C	20.7		C	28.7	
	EBL	C	30.3		C	29.7	
	EBT/R	C	20.1		D	38.7	
	WBL/T/R	C	26.2		C	34.5	

TABLE 4A
QUEUING SUMMARY OF NORTH MAIN STREET & PATRICK HENRY DRIVE

LANES	EXISTING		NO-BUILD		BUILD		DIFFERENCE	
	AM Peak	PM Peak	AM Peak	PM Peak	AM Peak	PM Peak	AM Peak	PM Peak
EBL	80	131	84	168	91	156	7	-12
EBTR	123	308	144	334	138	436	-6	102
WBLT	110	155	110	167	113	182	3	15
WBTR	88	140	87	145	84	150	-3	5
NBL	83	149	80	149	85	149	5	0
NBT	84	199	92	244	86	238	-6	-6
NBTR	105	222	108	217	101	221	-7	4
SBL	68	105	60	88	69	93	9	5
SBT	182	191	192	198	198	213	6	15
SBTR	197	201	195	218	201	230	6	12

Based on the capacity and queuing analysis results, no mitigation measures are recommended to accommodate the proposed development traffic at this intersection.

8.3. North Main Street and Montgomery Street NW

Under existing traffic conditions, capacity analysis indicates that major street shared left-through movements experience minor delays and operate at LOS A during the AM and PM peak hours. The stop-controlled approaches of Montgomery Street NW and the gas station access experience minor to moderate overall delays and operate at LOS C or better. Under future traffic conditions, capacity analysis indicates that major street shared left-through movements experience minor delays and operate at LOS B or better during the AM and PM peak hours. The stop-controlled approaches of Montgomery Street NW and the gas station access experience minor to moderate overall delays and operate at LOS C or better. Refer to Table 5 for a summary of the capacity analysis results for this unsignalized intersection. Copies of the Synchro capacity analysis reports are located in Appendix E.

TABLE 5
ANALYSIS SUMMARY OF NORTH MAIN STREET & MONTGOMERY STREET NW [UNSIGNALIZED]

TRAFFIC SCENARIO	LANE GROUP	AM PEAK HOUR		PM PEAK HOUR	
		Lane LOS	Delay (s)	Lane LOS	Delay (s)
Existing (2018) Conditions	NBL/T[2]	A / A	9.1 / 0.0	A / A	9.3 / 0.3
	SBL/T[2]	A / A	8.0 / 0.0	A / A	9.1 / 0.1
	EBL/T/R[1]	B	10.7	B	14.1
	WBL/T/R[1]	B	14.1	C	16.3
No-Build (2020) Conditions	NBL/T[2]	A / A	9.1 / 0.0	A / A	9.4 / 0.3
	SBL/T[2]	A / A	8.0 / 0.0	A / A	9.2 / 0.1
	EBL/T/R[1]	B	10.8	B	14.3
	WBL/T/R[1]	B	14.3	C	16.6
Build (2020) Conditions	NBL/T[2]	A / A	9.5 / 0.2	B / A	10.3 / 0.9
	SBL/T[2]	A / A	8.0 / 0.0	A / A	9.3 / 0.1
	EBL/T/R[1]	B	13.9	C	24.5
	WBL/T/R[1]	C	16.7	C	24.4

Note: HCM methodology does not provide a level of service for a main street through movement or shared through-right turn movement at unsignalized intersections
1. Level of service for stop-controlled minor approach
2. Level of service for major street shared left turn and through movement

Based on a review of the maximum queuing results that are based on the average results of ten (10) simulation runs, no queuing problems were identified. When compared to the 'no-build' traffic conditions, the queue lengths under 'build' conditions are not expected to increase by more than 90 feet [or approximately 3 vehicles]. Refer to Table 5A for a summary of the queuing analysis results for this unsignalized intersection. Copies of the SimTraffic queuing analysis reports are located in Appendix F.

TABLE 5A
QUEUING SUMMARY OF NORTH MAIN STREET & MONTGOMERY STREET NW

LANES	EXISTING		NO-BUILD		BUILD		DIFFERENCE	
	AM Peak	PM Peak	AM Peak	PM Peak	AM Peak	PM Peak	AM Peak	PM Peak
EBLTR	26	46	24	46	49	92	25	46
WBLTR	31	42	33	40	31	48	-2	8
NBLT	33	71	32	81	76	146	44	65
NBTR	0	19	2	26	0	112	-2	86
SBLT	27	37	15	34	16	44	1	10
SBTR	2	4	0	4	8	21	8	17

While a northbound left turn lane is warranted on North Main Street at Montgomery Street NW under future 'build' conditions (refer to Appendix D), it was also determined that a northbound left turn lane is warranted under existing traffic conditions during the PM peak hour. The left turn movement is not expected to significantly impact the advancing through volumes on North Main Street due to the multi-lane cross-section provided on North Main Street, which allows opposing traffic volumes to be dispersed between two lanes while permitting vehicles to utilize the outside travel lane to circumvent a left-turning vehicle that is temporarily stopped. This operation is exhibited by the minimal delays of less than 10.5 seconds per vehicle that are expected for the shared left-through movement with the addition of development traffic. Therefore, no mitigation measures are recommended to accommodate the proposed development traffic at this intersection since a southbound right turn lane is not warranted. This is consistent with the existing cross-section at other unsignalized intersections and access connections located along North Main Street within the study area.

8.4. North Main Street and YMCA Access/Site Access

Under existing traffic conditions, capacity analysis indicates that major street shared left-through movement experiences minor delays and operates at LOS A during the AM and PM peak hours. The stop-controlled approach of the YMCA Access experiences minor to moderate overall delays and operates at LOS C or better. Under future traffic conditions, capacity analysis indicates that major street shared left-through movements are expected to experience minor delays and operate at LOS A during the AM and PM peak hours. The stop-controlled approaches of the YMCA Access and Site Access [under 'build' conditions only] are expected experience minor to moderate overall delays and operate at LOS D or better.

Refer to Table 6 for a summary of the capacity analysis results for this unsignalized intersection. Copies of the Synchro capacity analysis reports are located in Appendix E.

TABLE 6
ANALYSIS SUMMARY OF NORTH MAIN STREET & YMCA ACCESS/SITE ACCESS [UNSIGNALIZED]

TRAFFIC SCENARIO	LANE GROUP	AM PEAK HOUR		PM PEAK HOUR	
		Lane LOS	Delay (s)	Lane LOS	Delay (s)
Existing (2018) Conditions	SBL/T[2] WBL/R[1]	A / A B	7.9 / 0.0 14.6	A / A C	9.1 / 0.0 17.7
No-Build (2020) Conditions	SBL/T[2] WBL/R[1]	A / A B	8.0 / 0.0 14.8	A / A C	9.2 / 0.0 18.1
Build (2020) Conditions	NBL/T[2] SBL/T[2] EBR[1] WBL/T/R[1]	A / A A / A B C	9.4 / 0.2 8.0 / 0.0 11.5 19.1	A / A A / A B D	9.8 / 0.5 9.2 / 0.0 12.6 30.4

Note: HCM methodology does not provide a level of service for a main street through movement or shared through-right turn movement at unsignalized intersections
1. Level of service for stop-controlled minor approach
2. Level of service for major street shared left turn and through movement

Based on a review of the maximum queuing results that are based on the average results of ten (10) simulation runs, no queuing problems were identified. When compared to the 'no-build' traffic conditions, the queue lengths under 'build' conditions are not expected to increase by more than 25 feet [or approximately 1 vehicle] for existing movements. Refer to Table 6A for a summary of the queuing analysis results for this unsignalized intersection. Copies of the SimTraffic queuing analysis reports are located in Appendix F.

TABLE 6A
QUEUING SUMMARY OF NORTH MAIN STREET & YMCA ACCESS/SITE ACCESS

LANES	EXISTING		NO-BUILD		BUILD		DIFFERENCE	
	AM Peak	PM Peak	AM Peak	PM Peak	AM Peak	PM Peak	AM Peak	PM Peak
EBR[1]	-	-	-	-	70	87	70	87
WBLR	21	39	18	43	-	-	-	-
WBLTR[1]	-	-	-	-	24	47	6	4
NBT	0	0	0	0	-	-	-	-
NBLT[1]	-	-	-	-	53	91	53	91
NBTR	0	0	0	0	0	15	0	15
SBLT	27	28	16	16	37	25	21	9
SBT	0	0	0	0	-	-	-	-
SBTR[1]	-	-	-	-	11	21	11	21

1. New lane configuration upon build out of proposed redevelopment

While a northbound left turn lane is warranted on North Main Street at the Site Access under future 'build' conditions (refer to Appendix D), the left turn movement is not expected to significantly impact the advancing through volumes on North Main Street due to the multi-lane cross-section provided on North Main Street that allows opposing traffic volumes to be dispersed between two lanes while permitting vehicles to utilize the outside travel lane to circumvent a left-turning vehicle that is temporarily stopped. This operation is exhibited by the minimal delays of less than 10.0 seconds per vehicle that are expected for the shared left-through movement with the addition of development traffic. Therefore, no mitigation measures are recommended to accommodate the proposed development traffic at this intersection since a southbound right turn lane is not warranted. This is consistent with the existing cross-section at other unsignalized intersections and access connections located along North Main Street within the study area.

8.5. North Main Street and Lucas Drive

Under existing traffic conditions, capacity analysis indicates that major street shared left-through movement experiences minor delays and operates at LOS A during the AM and PM peak hours. The stop-controlled approaches of the existing driveway and Lucas Drive experience minor to moderate overall delays and operates at LOS C or better. Under future traffic conditions, capacity analysis indicates that major street shared left-through movements are expected to experience minor delays and operate at LOS A during the AM and PM peak hours. The stop-controlled approaches of the existing driveway [under 'no-build conditions only] and Lucas Drive are expected to experience minor to moderate overall delays and operate at LOS C or better. Refer to Table 7 for a summary of the capacity analysis results for this unsignalized intersection. Copies of the Synchro capacity analysis reports are located in Appendix E.

Based on a review of the maximum queuing results that are based on the average results of ten (10) simulation runs, no queuing problems were identified. When compared to the 'no-build' traffic conditions, the queue lengths under 'build' conditions are not expected to increase by more than 20 feet [or approximately 1 vehicle]. Refer to Table 7A for a summary of the queuing analysis results for this unsignalized intersection. Copies of the SimTraffic queuing analysis reports are located in Appendix F.

TABLE 7
ANALYSIS SUMMARY OF NORTH MAIN STREET & LUCAS DRIVE
[UNSIGNALIZED]

TRAFFIC SCENARIO	LANE GROUP	AM PEAK HOUR		PM PEAK HOUR	
		Lane LOS	Delay (s)	Lane LOS	Delay (s)
Existing (2018) Conditions	NBL/T[2] SBL/T[2] EBL/T/R[1] WBL/T/R[1]	A / A A / A B B	9.1 / 0.0 7.9 / 0.0 12.1 12.3	A / A A / A C C	9.2 / 0.1 9.1 / 0.1 17.2 20.8
No-Build (2020) Conditions	NBL/T[2] SBL/T[2] EBL/T/R[1] WBL/T/R[1]	A / A A / A B B	9.1 / 0.0 7.9 / 0.0 12.2 12.4	A / A A / A C C	9.2 / 0.1 9.2 / 0.1 17.6 21.3
Build (2020) Conditions	SBL/T[2] WBL/R[1]	A / A B	8.0 / 0.0 12.1	A / A C	9.2 / 0.1 18.7

Note: HCM methodology does not provide a level of service for a main street through movement or shared through-right turn movement at unsignalized intersections
1. Level of service for stop-controlled minor approach
2. Level of service for major street shared left turn and through movement

TABLE 7A
QUEUING SUMMARY OF NORTH MAIN STREET & LUCAS DRIVE

LANES	EXISTING		NO-BUILD		BUILD		DIFFERENCE	
	AM Peak	PM Peak	AM Peak	PM Peak	AM Peak	PM Peak	AM Peak	PM Peak
EBLTR[1]	32	42	33	44	-	-	-	-
WBLTR	36	47	36	42	39	35	3	-7
NBLT	36	44	22	49	0	0	-22	-49
NBTR	0	0	0	7	0	0	0	-7
SBLT	25	38	21	39	32	55	11	16
SBTR	0	0	0	2	0	0	0	-2

1. Eastbound connection removed as part of proposed development

Based on the capacity and queuing analysis results, no mitigation measures are recommended to accommodate the proposed development traffic at this intersection.

8.6. Montgomery Street NW and Site Access

Under future 'build' traffic conditions, capacity analysis indicates that major street shared left-through movement is expected to experience minor delays and operate at LOS A during the AM and PM peak hours since no [or a miniscule] amount of traffic is expected to access the development from that approach. The stop-controlled approach of the Site Access is expected

to experience minor overall delays and operate at LOS A. Refer to Table 8 for a summary of the capacity analysis results for this unsignalized intersection. Copies of the Synchro capacity analysis reports are located in Appendix E.

TABLE 8
ANALYSIS SUMMARY OF MONTGOMERY STREET NW & SITE ACCESS
[UNSIGNALIZED]

TRAFFIC SCENARIO	LANE GROUP	AM PEAK HOUR		PM PEAK HOUR	
		Lane LOS	Delay (s)	Lane LOS	Delay (s)
Build (2020) Conditions	SBL/R[2] EBL/T[1]	A A / A	8.9 0.0 / 0.0	A A / A	9.5 0.0 / 0.0

Note: HCM methodology does not provide a level of service for a main street through movement or shared through-right turn movement at unsignalized intersections
1. Level of service for stop-controlled minor approach
2. Level of service for major street shared left turn and through movement

Based on a review of the maximum queuing results that are based on the average results of ten (10) simulation runs, no queuing problems were identified. The queue lengths under 'build' conditions are not expected to exceed 55 feet [or approximately 2-3 vehicles]. Refer to Table 8A for a summary of the queuing analysis results for this unsignalized intersection. Copies of the SimTraffic queuing analysis reports are located in Appendix F.

TABLE 8A
QUEUING SUMMARY OF MONTGOMERY STREET NW & SITE ACCESS

LANES	BUILD	
	AM Peak	PM Peak
EBLT	0	0
WBTR	0	0
SBLR	45	55

Based on the capacity and queuing analysis results, no mitigation measures are recommended to accommodate the proposed development traffic at this intersection.

9. CONCLUSIONS AND RECOMMENDATIONS

Based on the results of this traffic impact analysis, the proposed development is not expected to have a significant impact to the study area. Under the proposed redevelopment plan, the total number of access connections along North Main Street will be reduced by six, with only one access connection to be located on North Main Street and another access connection on Montgomery Street NW. A conservative approach was also taken when generating traffic for the development, and no reduction in traffic was considered for internal capture or pass-by trips although both could be expected based on the land uses being proposed. In addition, the trip generation was not reduced to account for traffic that is currently generated by the existing land uses located on the site. Finally, the proposed development traffic is expected to be accommodated without any additional lanes or traffic control measures that is consistent with the existing cross-section at other unsignalized intersections and access connections located along North Main Street within the study area.

Figure 13 shows the proposed lane configurations.

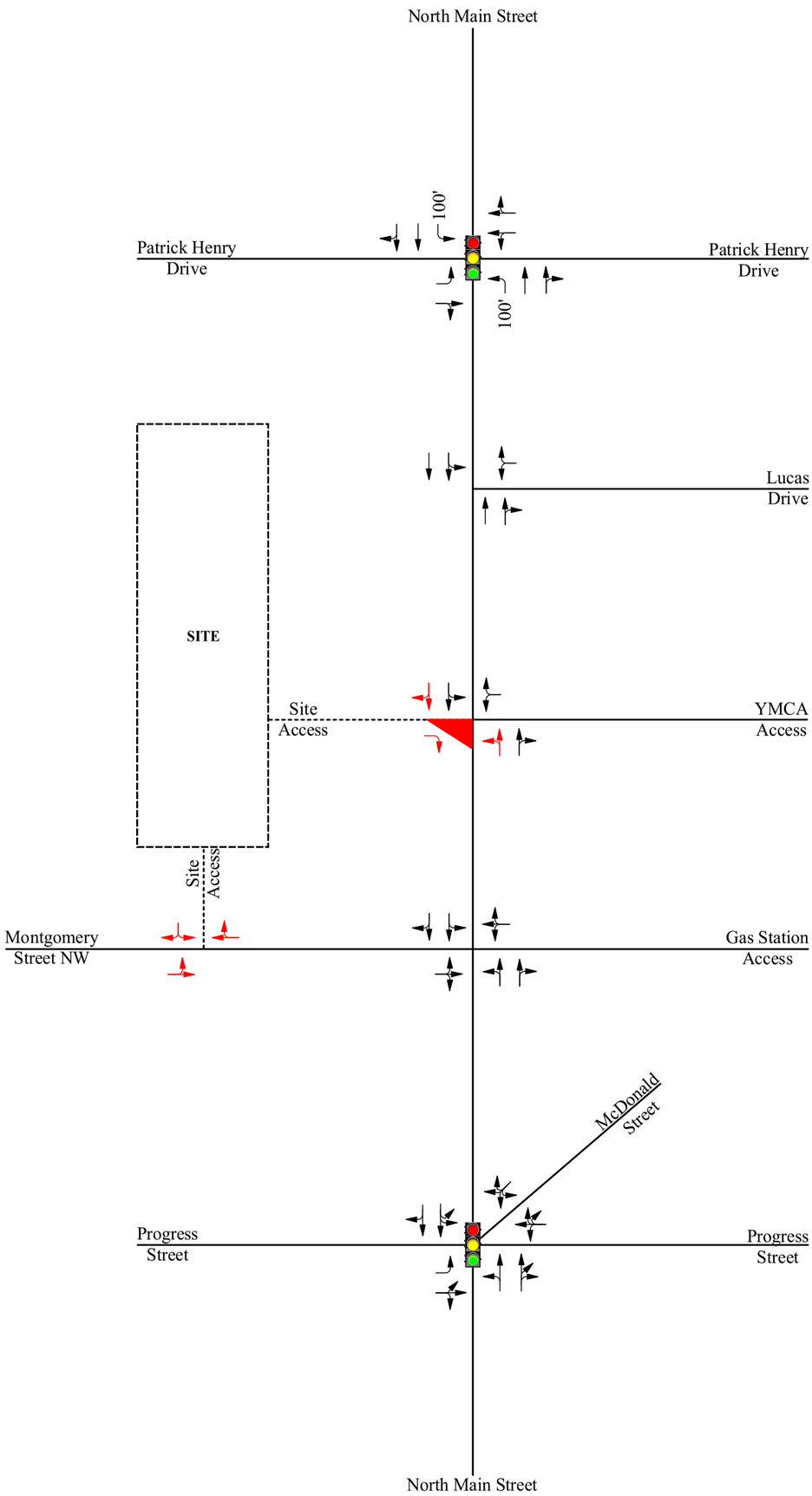

LEGEND

Signalized Intersection

X'→ Existing Lane Configuration and Storage Length (in feet)

Proposed Leftover Intersection

→ Proposed Lane Configuration

N

RAMEY KEMP & ASSOCIATES
TRANSPORTATION ENGINEERS

The Reserve at Blacksburg
Blacksburg, Virginia

Proposed Lane Configurations

Not to Scale | Figure 13

TECHNICAL APPENDIX

APPENDIX A

TRAFFIC COUNT DATA

DAY 1

File Name : Blacksburg(Main and Progress)
Site Code :
Start Date : 11/14/2018
Page No : 1

Groups Printed- Cars + - Trucks

	Main Street Southbound					Progress Street Westbound					Main Street Northbound					Progress Street Eastbound					
Start Time	Right	Thru	Left	Peds	App. Total	Right	Thru	Left	Peds	App. Total	Right	Thru	Left	Peds	App. Total	Right	Thru	Left	Peds	App. Total	Int. Total
06:00 AM	0	26	0	0	26	0	0	0	0	0	0	31	0	0	31	5	1	0	0	6	63
06:15 AM	1	34	0	0	35	1	1	0	0	2	0	40	0	0	40	4	0	0	0	4	81
06:30 AM	1	58	0	0	59	0	0	0	0	0	0	27	3	0	30	9	1	0	2	12	101
06:45 AM	1	55	0	1	57	1	2	2	0	5	1	40	2	0	43	9	2	0	0	11	116
Total	3	173	0	1	177	2	3	2	0	7	1	138	5	0	144	27	4	0	2	33	361
07:00 AM	0	62	1	0	63	1	1	2	1	5	0	35	4	0	39	9	2	1	2	14	121
07:15 AM	1	109	1	1	112	0	2	0	1	3	0	56	6	0	62	16	2	1	1	20	197
07:30 AM	2	137	0	0	139	1	4	4	5	14	1	43	4	0	48	19	7	2	1	29	230
07:45 AM	3	151	3	2	159	1	0	3	6	10	3	41	6	1	51	17	5	0	4	26	246
Total	6	459	5	3	473	3	7	9	13	32	4	175	20	1	200	61	16	4	8	89	794
08:00 AM	1	101	5	0	107	2	1	2	2	7	1	37	6	0	44	15	4	1	1	21	179
08:15 AM	2	97	5	0	104	3	5	3	0	11	2	33	5	0	40	15	3	3	0	21	176
08:30 AM	7	133	3	4	147	4	2	1	0	7	1	55	6	0	62	13	5	1	6	25	241
08:45 AM	3	158	6	1	168	4	0	7	6	17	2	66	9	0	77	31	6	2	14	53	315
Total	13	489	19	5	526	13	8	13	8	42	6	191	26	0	223	74	18	7	21	120	911
09:00 AM	6	133	1	3	143	3	5	3	3	14	2	73	3	0	78	22	6	2	4	34	269
09:15 AM	1	111	5	1	118	4	5	4	1	14	2	62	7	0	71	15	1	3	5	24	227
09:30 AM	3	120	2	1	126	3	3	7	1	14	2	68	7	0	77	15	4	2	4	25	242
09:45 AM	3	149	4	1	157	4	5	7	4	20	3	60	11	0	74	24	4	4	4	36	287
Total	13	513	12	6	544	14	18	21	9	62	9	263	28	0	300	76	15	11	17	119	1025
10:00 AM	3	99	5	5	112	0	1	1	1	3	4	114	11	0	129	17	1	3	5	26	270
10:15 AM	3	74	4	0	81	5	3	3	0	11	0	84	12	0	96	20	4	7	3	34	222
10:30 AM	7	108	3	3	121	2	4	5	2	13	3	70	8	0	81	22	3	4	1	30	245
10:45 AM	2	127	3	3	135	2	3	3	1	9	3	65	14	0	82	20	3	2	1	26	252
Total	15	408	15	11	449	9	11	12	4	36	10	333	45	0	388	79	11	16	10	116	989
11:00 AM	1	114	2	2	119	7	8	2	0	17	3	109	16	0	128	21	3	4	5	33	297
11:15 AM	2	102	5	0	109	4	3	7	2	16	5	90	13	0	108	13	3	2	1	19	252
11:30 AM	3	94	2	0	99	8	5	8	0	21	2	83	9	0	94	15	3	1	1	20	234
11:45 AM	4	140	7	3	154	6	5	0	6	17	5	104	6	0	115	29	9	4	3	45	331
Total	10	450	16	5	481	25	21	17	8	71	15	386	44	0	445	78	18	11	10	117	1114
12:00 PM	6	125	7	2	140	8	6	5	1	20	2	112	11	0	125	23	3	3	6	35	320
12:15 PM	4	98	4	1	107	10	8	2	9	29	7	110	10	0	127	19	4	7	3	33	296
12:30 PM	3	110	4	2	119	8	4	2	1	15	5	106	18	0	129	18	6	1	3	28	291
12:45 PM	3	139	6	0	148	10	7	6	5	28	1	96	8	0	105	12	6	5	1	24	305
Total	16	472	21	5	514	36	25	15	16	92	15	424	47	0	486	72	19	16	13	120	1212
01:00 PM	3	141	7	2	153	6	5	3	3	17	0	107	8	0	115	18	4	5	0	27	312
01:15 PM	3	105	2	0	110	6	6	5	3	20	0	109	21	0	130	34	2	7	1	44	304
01:30 PM	5	109	6	1	121	8	7	2	1	18	9	75	21	1	106	22	4	2	1	29	274
01:45 PM	4	96	2	0	102	8	4	2	0	14	2	94	21	0	117	31	4	5	0	40	273
Total	15	451	17	3	486	28	22	12	7	69	11	385	71	1	468	105	14	19	2	140	1163
02:00 PM	3	113	5	2	123	4	8	5	1	18	1	94	13	2	110	25	2	4	3	34	285
02:15 PM	2	101	6	0	109	8	6	3	0	17	5	126	17	0	148	31	5	2	1	39	313
02:30 PM	3	84	4	0	91	4	3	6	2	15	2	97	15	0	114	28	6	8	4	46	266
02:45 PM	3	85	8	2	98	14	9	8	1	32	8	97	17	1	123	27	5	5	4	41	294
Total	11	383	23	4	421	30	26	22	4	82	16	414	62	3	495	111	18	19	12	160	1158
03:00 PM	6	87	9	1	103	8	5	8	4	25	8	108	11	0	127	15	4	3	0	22	277
03:15 PM	2	99	4	0	105	4	3	0	1	8	3	101	18	0	122	18	4	6	1	29	264
03:30 PM	3	149	3	2	157	9	4	7	2	22	5	99	16	0	120	30	3	5	1	39	338
03:45 PM	7	115	8	3	133	9	8	9	3	29	7	119	17	3	146	27	9	13	4	53	361
Total	18	450	24	6	498	30	20	24	10	84	23	427	62	3	515	90	20	27	6	143	1240

File Name : Blacksburg(Main and Progress)
Site Code :
Start Date : 11/14/2018
Page No : 2

Groups Printed- Cars + - Trucks

	Main Street Southbound					Progress Street Westbound					Main Street Northbound					Progress Street Eastbound					
Start Time	Right	Thru	Left	Peds	App. Total	Right	Thru	Left	Peds	App. Total	Right	Thru	Left	Peds	App. Total	Right	Thru	Left	Peds	App. Total	Int. Total
04:00 PM	3	104	4	2	113	7	15	3	6	31	1	134	25	0	160	25	5	14	5	49	353
04:15 PM	3	111	6	2	122	10	7	6	1	24	5	132	17	0	154	21	7	5	2	35	335
04:30 PM	5	115	9	0	129	19	12	7	2	40	6	134	12	0	152	19	4	4	1	28	349
04:45 PM	7	141	9	2	159	13	8	8	4	33	2	127	18	0	147	42	7	8	6	63	402
Total	18	471	28	6	523	49	42	24	13	128	14	527	72	0	613	107	23	31	14	175	1439
05:00 PM	7	161	12	0	180	15	11	8	4	38	5	113	17	0	135	28	17	9	8	62	415
05:15 PM	7	142	9	2	160	13	20	8	3	44	2	137	14	0	153	40	13	13	5	71	428
05:30 PM	4	106	4	1	115	17	19	5	4	45	5	180	27	0	212	33	5	7	4	49	421
05:45 PM	1	125	3	4	133	12	13	3	2	30	2	128	26	0	156	27	9	1	3	40	359
Total	19	534	28	7	588	57	63	24	13	157	14	558	84	0	656	128	44	30	20	222	1623
06:00 PM	2	130	6	1	139	13	8	2	1	24	5	134	15	0	154	21	10	5	4	40	357
06:15 PM	6	134	3	1	144	7	9	4	2	22	7	131	13	0	151	35	7	2	2	46	363
06:30 PM	6	122	4	10	142	11	10	4	3	28	4	124	21	0	149	35	9	3	5	52	371
06:45 PM	0	121	6	2	129	10	4	2	3	19	7	128	18	0	153	23	10	2	3	38	339
Total	14	507	19	14	554	41	31	12	9	93	23	517	67	0	607	114	36	12	14	176	1430
Grand Total	171	5760	227	76	6234	337	297	207	114	955	161	4738	633	8	5540	1122	256	203	149	1730	14459
Apprch %	2.7	92.4	3.6	1.2		35.3	31.1	21.7	11.9		2.9	85.5	11.4	0.1		64.9	14.8	11.7	8.6		
Total %	1.2	39.8	1.6	0.5	43.1	2.3	2.1	1.4	0.8	6.6	1.1	32.8	4.4	0.1	38.3	7.8	1.8	1.4	1	12	
Cars +	171	5749	227	71	6218	337	297	207	86	927	161	4729	633	4	5527	1122	256	203	125	1706	14378
% Cars +	100	99.8	100	93.4	99.7	100	100	100	75.4	97.1	100	99.8	100	50	99.8	100	100	100	83.9	98.6	99.4
Trucks	0	11	0	5	16	0	0	0	28	28	0	9	0	4	13	0	0	0	24	24	81
% Trucks	0	0.2	0	6.6	0.3	0	0	0	24.6	2.9	0	0.2	0	50	0.2	0	0	0	16.1	1.4	0.6

File Name : Blacksburg(Main and Progress)
Site Code :
Start Date : 11/14/2018
Page No : 3

	Main Street Southbound					Progress Street Westbound					Main Street Northbound					Progress Street Eastbound					
Start Time	Right	Thru	Left	Peds	App. Total	Right	Thru	Left	Peds	App. Total	Right	Thru	Left	Peds	App. Total	Right	Thru	Left	Peds	App. Total	Int. Total
Peak Hour Analysis From 07:00 AM to 10:00 AM - Peak 1 of 1																					
Peak Hour for Entire Intersection Begins at 08:45 AM																					
08:45 AM	3	158	6	1	168	4	0	7	6	17	2	66	9	0	77	31	6	2	14	53	315
09:00 AM	6	133	1	3	143	3	5	3	3	14	2	73	3	0	78	22	6	2	4	34	269
09:15 AM	1	111	5	1	118	4	5	4	1	14	2	62	7	0	71	15	1	3	5	24	227
09:30 AM	3	120	2	1	126	3	3	7	1	14	2	68	7	0	77	15	4	2	4	25	242
Total Volume	13	522	14	6	555	14	13	21	11	59	8	269	26	0	303	83	17	9	27	136	1053
% App. Total	2.3	94.1	2.5	1.1		23.7	22	35.6	18.6		2.6	88.8	8.6	0		61	12.5	6.6	19.9		
PHF	.542	.826	.583	.500	.826	.875	.650	.750	.458	.868	1.00	.921	.722	.000	.971	.669	.708	.750	.482	.642	.836

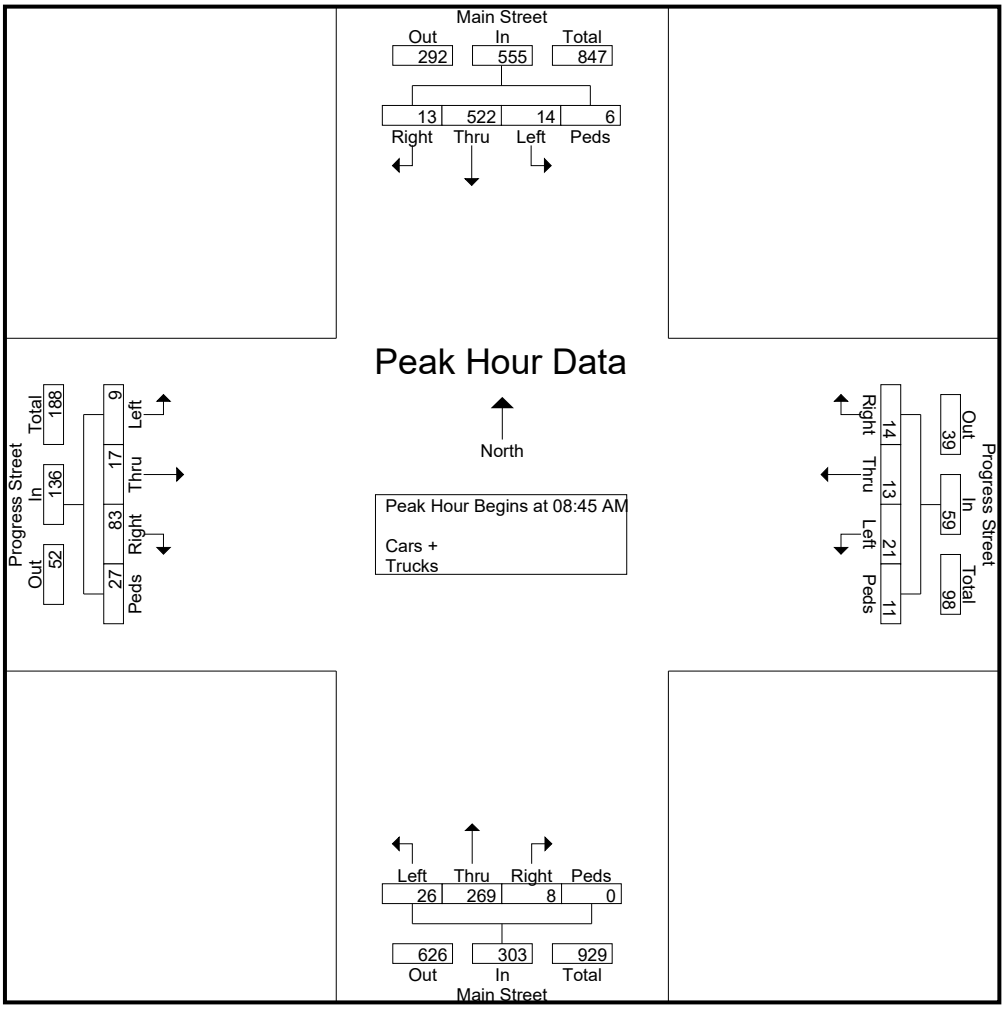

File Name : Blacksburg(Main and Progress)
Site Code :
Start Date : 11/14/2018
Page No : 4

	Main Street Southbound					Progress Street Westbound					Main Street Northbound					Progress Street Eastbound					
Start Time	Right	Thru	Left	Peds	App. Total	Right	Thru	Left	Peds	App. Total	Right	Thru	Left	Peds	App. Total	Right	Thru	Left	Peds	App. Total	Int. Total
Peak Hour Analysis From 12:00 PM to 07:00 PM - Peak 1 of 1																					
Peak Hour for Entire Intersection Begins at 04:45 PM																					
04:45 PM	7	141	9	2	159	13	8	8	4	33	2	127	18	0	147	42	7	8	6	63	402
05:00 PM	7	161	12	0	180	15	11	8	4	38	5	113	17	0	135	28	17	9	8	62	415
05:15 PM	7	142	9	2	160	13	20	8	3	44	2	137	14	0	153	40	13	13	5	71	428
05:30 PM	4	106	4	1	115	17	19	5	4	45	5	180	27	0	212	33	5	7	4	49	421
Total Volume	25	550	34	5	614	58	58	29	15	160	14	557	76	0	647	143	42	37	23	245	1666
% App. Total	4.1	89.6	5.5	0.8		36.2	36.2	18.1	9.4		2.2	86.1	11.7	0		58.4	17.1	15.1	9.4		
PHF	.893	.854	.708	.625	.853	.853	.725	.906	.938	.889	.700	.774	.704	.000	.763	.851	.618	.712	.719	.863	.973

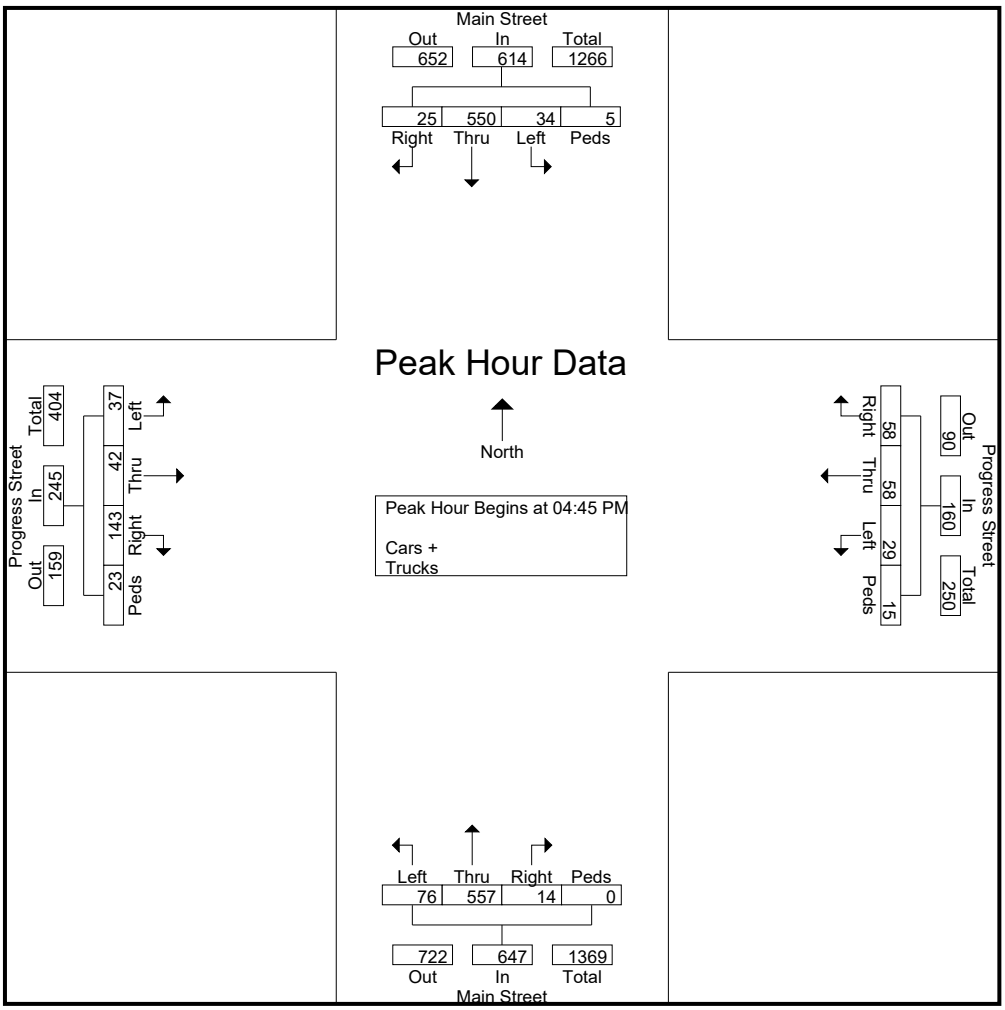

File Name : Blacksburg(Main and Patrick Henry)
Site Code :
Start Date : 11/27/2018
Page No : 1

Groups Printed- Cars + - Trucks

	Main Street Southbound					Patrick Henry Drive Westbound					Main Street Northbound					Patrick Henry Drive Eastbound					
Start Time	Right	Thru	Left	Peds	App. Total	Right	Thru	Left	Peds	App. Total	Right	Thru	Left	Peds	App. Total	Right	Thru	Left	Peds	App. Total	Int. Total
06:00 AM	5	27	5	0	37	4	1	5	0	10	1	7	2	0	10	5	2	3	0	10	67
06:15 AM	9	46	2	0	57	2	1	0	0	3	1	15	1	0	17	9	1	12	0	22	99
06:30 AM	13	59	2	0	74	0	4	4	0	8	2	13	2	0	17	6	3	4	0	13	112
06:45 AM	9	47	4	0	60	5	9	5	0	19	2	16	2	0	20	5	4	12	1	22	121
Total	36	179	13	0	228	11	15	14	0	40	6	51	7	0	64	25	10	31	1	67	399
07:00 AM	22	55	3	2	82	3	5	10	0	18	4	14	3	6	27	3	4	15	2	24	151
07:15 AM	24	86	10	0	120	4	14	13	0	31	3	10	2	7	22	24	7	15	0	46	219
07:30 AM	32	163	14	3	212	4	22	23	1	50	5	19	2	5	31	43	16	13	1	73	366
07:45 AM	28	145	9	0	182	7	19	19	0	45	5	19	3	2	29	36	8	17	2	63	319
Total	106	449	36	5	596	18	60	65	1	144	17	62	10	20	109	106	35	60	5	206	1055
08:00 AM	21	92	12	2	127	2	15	7	0	24	11	35	11	2	59	10	13	7	1	31	241
08:15 AM	25	79	8	1	113	8	21	8	1	38	6	18	2	2	28	17	11	10	1	39	218
08:30 AM	37	119	15	4	175	7	22	10	1	40	3	30	9	4	46	12	9	18	2	41	302
08:45 AM	30	127	18	1	176	11	21	11	0	43	3	30	11	5	49	21	20	13	1	55	323
Total	113	417	53	8	591	28	79	36	2	145	23	113	33	13	182	60	53	48	5	166	1084
09:00 AM	37	137	10	1	185	10	23	21	0	54	3	38	7	9	57	30	15	13	1	59	355
09:15 AM	23	110	8	1	142	6	17	13	0	36	7	42	19	6	74	25	6	15	2	48	300
09:30 AM	16	70	9	1	96	1	19	5	2	27	8	51	21	2	82	8	17	13	1	39	244
09:45 AM	22	63	10	0	95	3	14	9	0	26	10	25	14	0	49	12	14	15	0	41	211
Total	98	380	37	3	518	20	73	48	2	143	28	156	61	17	262	75	52	56	4	187	1110
10:00 AM	18	61	13	3	95	8	22	6	0	36	6	31	12	1	50	10	7	13	1	31	212
10:15 AM	26	66	6	0	98	8	17	7	0	32	5	40	7	6	58	17	7	18	0	42	230
10:30 AM	18	79	4	2	103	5	9	12	1	27	6	36	20	12	74	33	22	13	1	69	273
10:45 AM	19	76	9	0	104	8	11	15	0	34	12	51	22	3	88	31	16	17	1	65	291
Total	81	282	32	5	400	29	59	40	1	129	29	158	61	22	270	91	52	61	3	207	1006
11:00 AM	11	54	9	0	74	8	20	17	0	45	14	48	21	4	87	13	19	21	0	53	259
11:15 AM	19	85	15	1	120	7	13	6	0	26	10	42	22	1	75	7	12	19	1	39	260
11:30 AM	16	65	5	0	86	4	20	15	1	40	7	44	22	2	75	15	16	9	1	41	242
11:45 AM	14	76	8	2	100	9	18	4	1	32	10	57	20	6	93	17	17	22	0	56	281
Total	60	280	37	3	380	28	71	42	2	143	41	191	85	13	330	52	64	71	2	189	1042
12:00 PM	15	93	10	2	120	5	21	10	2	38	10	59	23	6	98	33	13	13	1	60	316
12:15 PM	12	91	10	0	113	9	15	12	0	36	8	64	26	3	101	13	12	24	0	49	299
12:30 PM	13	60	14	1	88	10	18	8	2	38	12	76	21	1	110	18	16	15	0	49	285
12:45 PM	21	78	11	0	110	8	13	10	1	32	10	63	23	0	96	20	20	13	0	53	291
Total	61	322	45	3	431	32	67	40	5	144	40	262	93	10	405	84	61	65	1	211	1191
01:00 PM	28	70	5	1	104	11	20	12	1	44	15	59	18	2	94	17	15	12	0	44	286
01:15 PM	16	62	8	0	86	6	18	12	0	36	9	48	12	2	71	16	24	23	1	64	257
01:30 PM	16	91	9	1	117	10	21	16	1	48	19	55	20	8	102	29	13	19	1	62	329
01:45 PM	16	69	3	4	92	3	20	11	6	40	13	55	32	3	103	26	14	11	1	52	287
Total	76	292	25	6	399	30	79	51	8	168	56	217	82	15	370	88	66	65	3	222	1159
02:00 PM	25	38	5	2	70	3	25	10	3	41	8	69	31	0	108	14	11	21	0	46	265
02:15 PM	18	47	12	6	83	9	16	9	1	35	9	51	17	1	78	23	16	14	2	55	251
02:30 PM	25	39	5	1	70	4	13	11	2	30	8	50	24	0	82	17	12	19	0	48	230
02:45 PM	14	47	10	3	74	9	17	7	1	34	8	61	17	0	86	23	15	18	0	56	250
Total	82	171	32	12	297	25	71	37	7	140	33	231	89	1	354	77	54	72	2	205	996
03:00 PM	20	67	4	2	93	8	16	14	0	38	11	54	24	7	96	24	16	15	0	55	282
03:15 PM	19	64	13	0	96	11	22	6	0	39	21	85	28	1	135	25	21	24	0	70	340
03:30 PM	30	76	17	2	125	12	23	8	1	44	10	109	47	5	171	10	19	26	4	59	399
03:45 PM	30	64	12	2	108	11	25	4	0	40	11	64	37	0	112	18	25	29	4	76	336
Total	99	271	46	6	422	42	86	32	1	161	53	312	136	13	514	77	81	94	8	260	1357

File Name : Blacksburg(Main and Patrick Henry)
Site Code :
Start Date : 11/27/2018
Page No : 2

Groups Printed- Cars + - Trucks

	Main Street Southbound					Patrick Henry Drive Westbound					Main Street Northbound					Patrick Henry Drive Eastbound					
Start Time	Right	Thru	Left	Peds	App. Total	Right	Thru	Left	Peds	App. Total	Right	Thru	Left	Peds	App. Total	Right	Thru	Left	Peds	App. Total	Int. Total
04:00 PM	48	58	14	3	123	6	25	9	3	43	15	98	30	1	144	26	17	18	0	61	371
04:15 PM	34	78	16	2	130	10	18	15	0	43	14	81	25	5	125	20	20	27	0	67	365
04:30 PM	53	83	8	4	148	14	24	18	2	58	14	88	24	2	128	31	31	26	3	91	425
04:45 PM	27	91	15	1	134	10	29	17	0	56	20	99	42	3	164	52	38	22	0	112	466
Total	162	310	53	10	535	40	96	59	5	200	63	366	121	11	561	129	106	93	3	331	1627
05:00 PM	35	64	24	1	124	12	58	8	0	78	20	123	36	3	182	29	29	27	1	86	470
05:15 PM	29	81	19	1	130	12	35	15	4	66	20	122	30	6	178	38	23	20	1	82	456
05:30 PM	31	68	22	0	121	12	21	11	3	47	11	88	30	2	131	28	32	29	0	89	388
05:45 PM	31	74	21	4	130	15	21	19	0	55	14	90	39	1	144	43	37	31	0	111	440
Total	126	287	86	6	505	51	135	53	7	246	65	423	135	12	635	138	121	107	2	368	1754
06:00 PM	22	72	14	2	110	11	28	11	0	50	13	73	34	0	120	44	37	31	0	112	392
06:15 PM	13	79	11	0	103	4	35	24	0	63	14	91	33	2	140	41	29	26	0	96	402
06:30 PM	14	57	4	1	76	2	19	7	0	28	16	82	49	0	147	33	22	23	1	79	330
06:45 PM	17	53	11	12	93	4	20	16	0	40	19	70	27	1	117	31	28	28	0	87	337
Total	66	261	40	15	382	21	102	58	0	181	62	316	143	3	524	149	116	108	1	374	1461
Grand Total	1166	3901	535	82	5684	375	993	575	41	1984	516	2858	1056	150	4580	1151	871	931	40	2993	15241
Apprch %	20.5	68.6	9.4	1.4		18.9	50.1	29	2.1		11.3	62.4	23.1	3.3		38.5	29.1	31.1	1.3		
Total %	7.7	25.6	3.5	0.5	37.3	2.5	6.5	3.8	0.3	13	3.4	18.8	6.9	1	30.1	7.6	5.7	6.1	0.3	19.6	
Cars +	1162	3881	534	82	5659	375	964	572	41	1952	515	2846	1055	150	4566	1151	869	929	40	2989	15166
% Cars +	99.7	99.5	99.8	100	99.6	100	97.1	99.5	100	98.4	99.8	99.6	99.9	100	99.7	100	99.8	99.8	100	99.9	99.5
Trucks	4	20	1	0	25	0	29	3	0	32	1	12	1	0	14	0	2	2	0	4	75
% Trucks	0.3	0.5	0.2	0	0.4	0	2.9	0.5	0	1.6	0.2	0.4	0.1	0	0.3	0	0.2	0.2	0	0.1	0.5

File Name : Blacksburg(Main and Patrick Henry)
Site Code :
Start Date : 11/27/2018
Page No : 3

	Main Street Southbound					Patrick Henry Drive Westbound					Main Street Northbound					Patrick Henry Drive Eastbound					
Start Time	Right	Thru	Left	Peds	App. Total	Right	Thru	Left	Peds	App. Total	Right	Thru	Left	Peds	App. Total	Right	Thru	Left	Peds	App. Total	Int. Total
Peak Hour Analysis From 06:00 AM to 11:45 AM - Peak 1 of 1																					
Peak Hour for Entire Intersection Begins at 08:30 AM																					
08:30 AM	37	119	15	4	175	7	22	10	1	40	3	30	9	4	46	12	9	18	2	41	302
08:45 AM	30	127	18	1	176	11	21	11	0	43	3	30	11	5	49	21	20	13	1	55	323
09:00 AM	37	137	10	1	185	10	23	21	0	54	3	38	7	9	57	30	15	13	1	59	355
09:15 AM	23	110	8	1	142	6	17	13	0	36	7	42	19	6	74	25	6	15	2	48	300
Total Volume	127	493	51	7	678	34	83	55	1	173	16	140	46	24	226	88	50	59	6	203	1280
% App. Total																					
PHF	.858	.900	.708	.438	.916	.773	.902	.655	.250	.801	.571	.833	.605	.667	.764	.733	.625	.819	.750	.860	.901

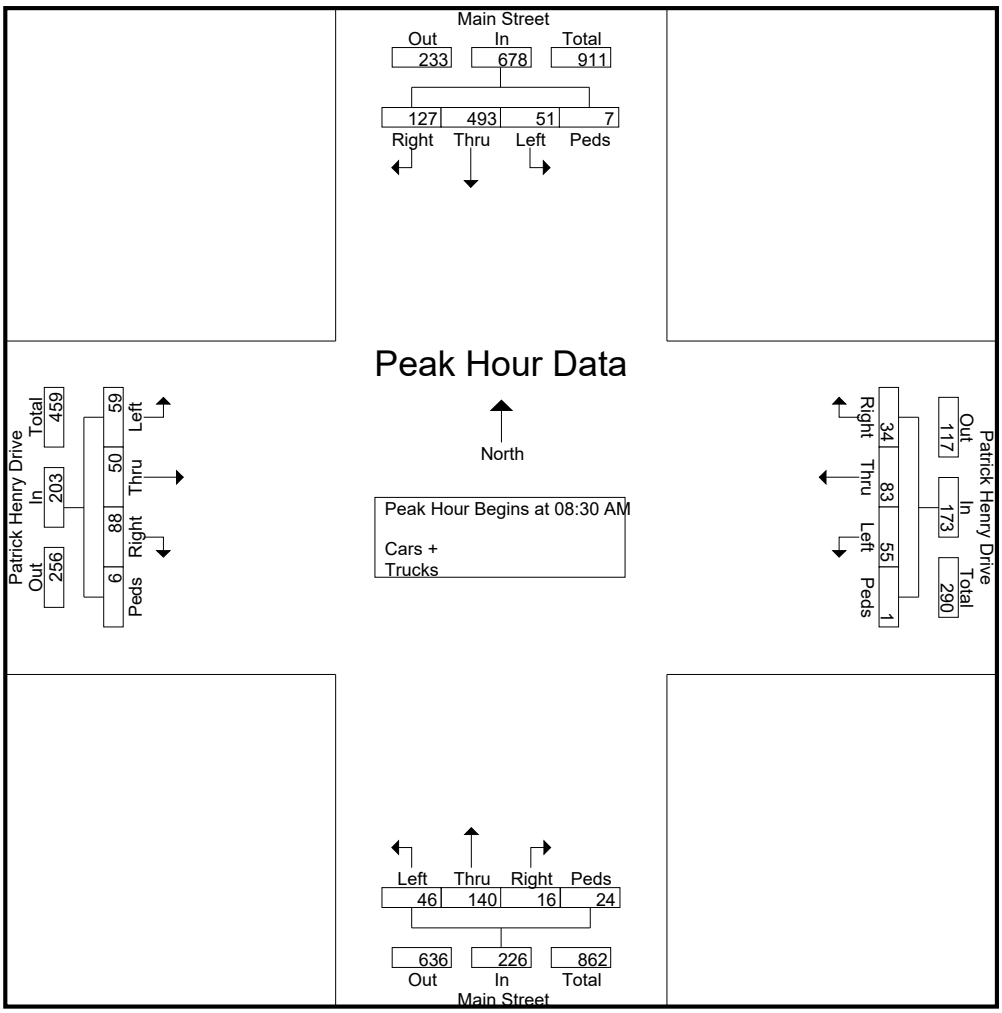

File Name : Blacksburg(Main and Patrick Henry)
Site Code :
Start Date : 11/27/2018
Page No : 4

	Main Street Southbound					Patrick Henry Drive Westbound					Main Street Northbound					Patrick Henry Drive Eastbound					
Start Time	Right	Thru	Left	Peds	App. Total	Right	Thru	Left	Peds	App. Total	Right	Thru	Left	Peds	App. Total	Right	Thru	Left	Peds	App. Total	Int. Total
Peak Hour Analysis From 12:00 PM to 07:00 PM - Peak 1 of 1																					
Peak Hour for Entire Intersection Begins at 04:30 PM																					
04:30 PM	53	83	8	4	148	14	24	18	2	58	14	88	24	2	128	31	31	26	3	91	425
04:45 PM	27	91	15	1	134	10	29	17	0	56	20	99	42	3	164	52	38	22	0	112	466
05:00 PM	35	64	24	1	124	12	58	8	0	78	20	123	36	3	182	29	29	27	1	86	470
05:15 PM	29	81	19	1	130	12	35	15	4	66	20	122	30	6	178	38	23	20	1	82	456
Total Volume	144	319	66	7	536	48	146	58	6	258	74	432	132	14	652	150	121	95	5	371	1817
% App. Total																					
PHF	.679	.876	.688	.438	.905	.857	.629	.806	.375	.827	.925	.878	.786	.583	.896	.721	.796	.880	.417	.828	.966

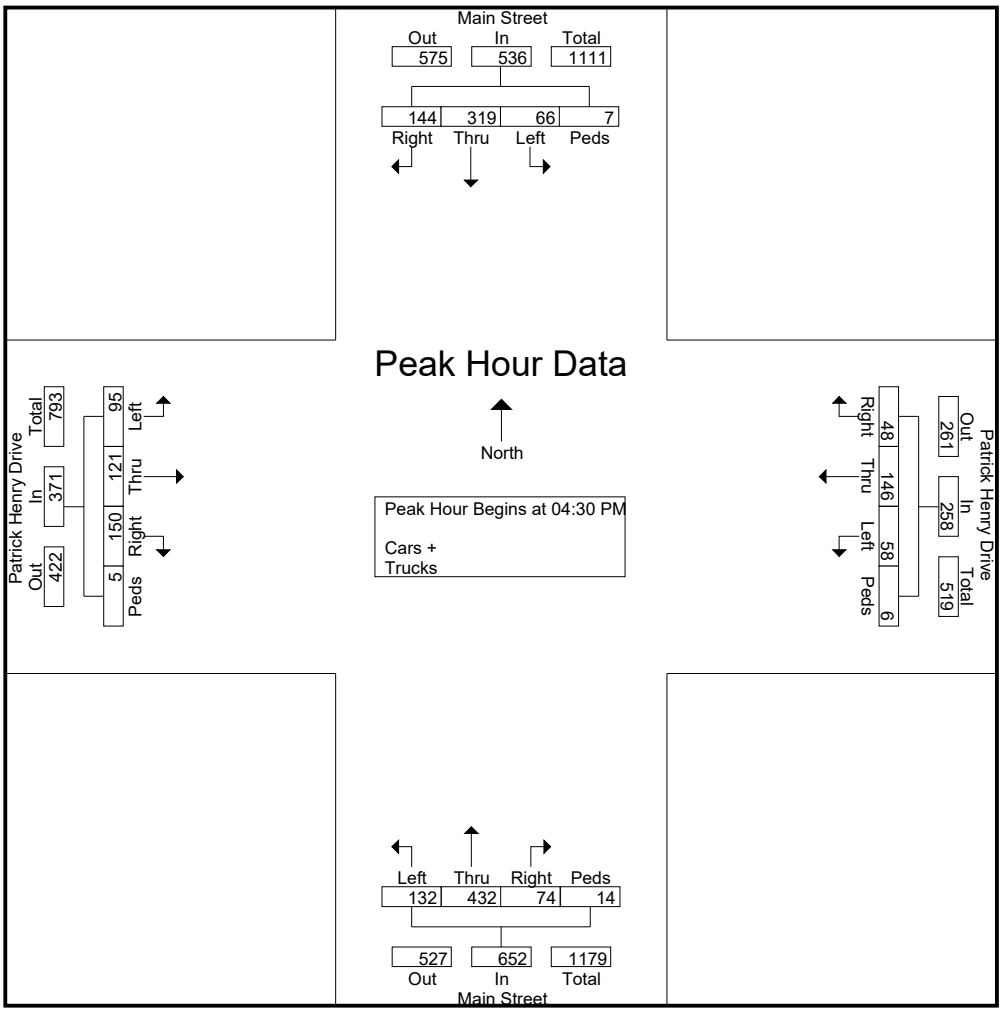

File Name : Blacksburg(Main and Montgomery)
Site Code :
Start Date : 11/14/2018
Page No : 1

Groups Printed- Cars + - Trucks

	Main Street Southbound					Gas Station Access Westbound					Main Street Northbound					Montgomery Street Eastbound					
Start Time	Right	Thru	Left	Peds	App. Total	Right	Thru	Left	Peds	App. Total	Right	Thru	Left	Peds	App. Total	Right	Thru	Left	Peds	App. Total	Int. Total
06:00 AM	0	25	0	0	25	0	0	0	0	0	0	30	1	0	31	0	0	0	0	0	56
06:15 AM	0	33	0	0	33	0	0	0	0	0	0	39	1	0	40	0	0	0	0	0	73
06:30 AM	0	57	0	0	57	0	0	0	0	0	0	23	1	0	24	3	0	0	2	5	86
06:45 AM	0	56	0	0	56	0	0	0	0	0	0	44	0	0	44	1	0	0	0	1	101
Total	0	171	0	0	171	0	0	0	0	0	0	136	3	0	139	4	0	0	2	6	316
07:00 AM	0	67	0	0	67	0	0	0	0	0	0	34	0	0	34	1	0	0	2	3	104
07:15 AM	0	99	2	0	101	0	0	3	2	5	1	57	1	0	59	2	0	0	1	3	168
07:30 AM	0	152	0	0	152	0	0	2	1	3	3	47	0	0	50	2	0	1	1	4	209
07:45 AM	0	175	1	0	176	1	0	0	1	2	1	40	1	0	42	1	0	0	3	4	224
Total	0	493	3	0	496	1	0	5	4	10	5	178	2	0	185	6	0	1	7	14	705
08:00 AM	1	110	0	0	111	0	0	0	3	3	1	51	1	0	53	4	0	1	2	7	174
08:15 AM	2	107	1	0	110	0	0	0	0	0	2	37	0	0	39	2	0	0	0	2	151
08:30 AM	1	132	1	0	134	1	0	1	1	3	2	59	2	0	63	2	0	2	3	7	207
08:45 AM	0	189	1	0	190	2	0	0	3	5	1	75	0	0	76	3	0	0	11	14	285
Total	4	538	3	0	545	3	0	1	7	11	6	222	3	0	231	11	0	3	16	30	817
09:00 AM	1	160	3	0	164	1	0	1	0	2	5	74	3	0	82	2	0	0	2	4	252
09:15 AM	1	110	0	1	112	0	0	3	0	3	7	73	1	1	82	3	0	0	3	6	203
09:30 AM	1	122	0	0	123	1	0	3	1	5	0	78	2	0	80	3	0	0	3	6	214
09:45 AM	0	135	1	0	136	2	0	0	2	4	3	62	0	1	66	5	0	0	3	8	214
Total	3	527	4	1	535	4	0	7	3	14	15	287	6	2	310	13	0	0	11	24	883
10:00 AM	4	91	2	0	97	2	0	3	3	8	4	94	2	0	100	5	0	1	2	8	213
10:15 AM	1	88	1	0	90	2	0	1	1	4	5	87	5	0	97	3	0	1	3	7	198
10:30 AM	2	95	0	0	97	0	0	3	0	3	2	67	2	0	71	5	0	1	1	7	178
10:45 AM	1	109	1	0	111	0	0	5	2	7	6	76	0	0	82	2	0	1	3	6	206
Total	8	383	4	0	395	4	0	12	6	22	17	324	9	0	350	15	0	4	9	28	795
11:00 AM	0	103	1	0	104	2	0	3	1	6	6	97	6	1	110	6	0	1	3	10	230
11:15 AM	2	89	1	0	92	2	1	4	1	8	3	96	1	0	100	1	0	0	0	1	201
11:30 AM	5	107	3	0	115	1	0	1	0	2	6	83	4	0	93	2	0	1	1	4	214
11:45 AM	5	137	1	0	143	1	0	5	2	8	7	103	2	0	112	4	0	0	1	5	268
Total	12	436	6	0	454	6	1	13	4	24	22	379	13	1	415	13	0	2	5	20	913
12:00 PM	5	138	0	0	143	0	0	9	0	9	6	123	7	0	136	3	0	1	4	8	296
12:15 PM	4	113	1	0	118	1	0	2	4	7	6	123	2	0	131	2	2	2	7	13	269
12:30 PM	0	103	1	0	104	6	0	6	2	14	7	99	2	0	108	6	0	1	2	9	235
12:45 PM	2	130	1	0	133	2	0	3	4	9	5	107	3	0	115	7	0	3	1	11	268
Total	11	484	3	0	498	9	0	20	10	39	24	452	14	0	490	18	2	7	14	41	1068
01:00 PM	0	132	2	0	134	1	0	5	4	10	1	110	5	1	117	3	0	1	0	4	265
01:15 PM	0	90	3	0	93	2	0	4	1	7	7	126	6	0	139	3	0	0	2	5	244
01:30 PM	2	115	0	0	117	4	0	4	1	9	3	96	2	0	101	5	0	1	2	8	235
01:45 PM	2	102	5	0	109	2	0	5	0	7	3	104	1	0	108	2	0	2	1	5	229
Total	4	439	10	0	453	9	0	18	6	33	14	436	14	1	465	13	0	4	5	22	973
02:00 PM	2	120	1	0	123	4	1	6	0	11	5	102	3	0	110	1	0	1	4	6	250
02:15 PM	0	108	1	0	109	1	0	4	0	5	1	146	1	0	148	2	0	0	0	2	264
02:30 PM	2	81	2	0	85	3	0	3	2	8	5	109	3	0	117	2	0	0	5	7	217
02:45 PM	2	89	3	0	94	2	0	6	4	12	3	108	5	0	116	3	0	0	3	6	228
Total	6	398	7	0	411	10	1	19	6	36	14	465	12	0	491	8	0	1	12	21	959
03:00 PM	0	101	1	0	102	3	0	5	2	10	3	110	4	0	117	3	0	0	1	4	233
03:15 PM	1	95	1	0	97	6	0	2	1	9	4	120	3	0	127	1	0	1	3	5	238
03:30 PM	3	165	1	1	170	1	0	2	2	5	3	118	2	0	123	1	1	0	1	3	301
03:45 PM	1	136	1	0	138	2	0	3	2	7	2	136	3	0	141	4	0	0	5	9	295
Total	5	497	4	1	507	12	0	12	7	31	12	484	12	0	508	9	1	1	10	21	1067

File Name : Blacksburg(Main and Montgomery)
Site Code :
Start Date : 11/14/2018
Page No : 2

Groups Printed- Cars + - Trucks

	Main Street Southbound					Gas Station Access Westbound					Main Street Northbound					Montgomery Street Eastbound					
Start Time	Right	Thru	Left	Peds	App. Total	Right	Thru	Left	Peds	App. Total	Right	Thru	Left	Peds	App. Total	Right	Thru	Left	Peds	App. Total	Int. Total
04:00 PM	2	100	0	0	102	6	0	3	2	11	6	175	6	0	187	4	0	0	1	5	305
04:15 PM	3	116	1	0	120	2	0	4	0	6	2	136	8	0	146	7	0	2	2	11	283
04:30 PM	4	128	0	1	133	5	0	0	2	7	4	156	4	0	164	3	0	0	1	4	308
04:45 PM	1	151	1	0	153	2	0	0	3	5	3	140	9	0	152	6	0	1	4	11	321
Total	10	495	2	1	508	15	0	7	7	29	15	607	27	0	649	20	0	3	8	31	1217
05:00 PM	6	172	1	1	180	5	0	3	3	11	3	149	3	0	155	5	0	1	9	15	361
05:15 PM	6	142	4	0	152	6	0	0	0	6	3	145	8	0	156	8	0	1	4	13	327
05:30 PM	6	124	1	0	131	2	0	2	2	6	1	168	9	0	178	9	0	1	4	14	329
05:45 PM	7	117	3	0	127	3	0	3	2	8	1	128	4	0	133	2	0	5	0	7	275
Total	25	555	9	1	590	16	0	8	7	31	8	590	24	0	622	24	0	8	17	49	1292
06:00 PM	4	134	1	0	139	3	0	1	1	5	0	136	10	0	146	4	0	4	6	14	304
06:15 PM	3	140	1	0	144	1	1	0	0	2	0	120	7	0	127	4	0	2	3	9	282
06:30 PM	3	130	1	0	134	2	0	2	6	10	0	116	5	1	122	5	0	5	0	10	276
06:45 PM	1	122	1	0	124	3	0	1	1	5	4	115	9	0	128	7	0	2	3	12	269
Total	11	526	4	0	541	9	1	4	8	22	4	487	31	1	523	20	0	13	12	45	1131
Grand Total	99	5942	59	4	6104	98	3	126	75	302	156	5047	170	5	5378	174	3	47	128	352	12136
Apprch %	1.6	97.3	1	0.1		32.5	1	41.7	24.8		2.9	93.8	3.2	0.1		49.4	0.9	13.4	36.4		
Total %	0.8	49	0.5	0	50.3	0.8	0	1	0.6	2.5	1.3	41.6	1.4	0	44.3	1.4	0	0.4	1.1	2.9	
Cars +	99	5935	59	3	6096	98	3	126	57	284	155	5038	169	5	5367	173	3	47	95	318	12065
% Cars +	100	99.9	100	75	99.9	100	100	100	76	94	99.4	99.8	99.4	100	99.8	99.4	100	100	74.2	90.3	99.4
Trucks	0	7	0	1	8	0	0	0	18	18	1	9	1	0	11	1	0	0	33	34	71
% Trucks	0	0.1	0	25	0.1	0	0	0	24	6	0.6	0.2	0.6	0	0.2	0.6	0	0	25.8	9.7	0.6

File Name : Blacksburg(Main and Montgomery)
Site Code :
Start Date : 11/14/2018
Page No : 3

	Main Street Southbound					Gas Station Access Westbound					Main Street Northbound					Montgomery Street Eastbound					
Start Time	Right	Thru	Left	Peds	App. Total	Right	Thru	Left	Peds	App. Total	Right	Thru	Left	Peds	App. Total	Right	Thru	Left	Peds	App. Total	Int. Total
Peak Hour Analysis From 07:00 AM to 10:00 AM - Peak 1 of 1																					
Peak Hour for Entire Intersection Begins at 08:45 AM																					
08:45 AM	0	189	1	0	190	2	0	0	3	5	1	75	0	0	76	3	0	0	11	14	285
09:00 AM	1	160	3	0	164	1	0	1	0	2	5	74	3	0	82	2	0	0	2	4	252
09:15 AM	1	110	0	1	112	0	0	3	0	3	7	73	1	1	82	3	0	0	3	6	203
09:30 AM	1	122	0	0	123	1	0	3	1	5	0	78	2	0	80	3	0	0	3	6	214
Total Volume	3	581	4	1	589	4	0	7	4	15	13	300	6	1	320	11	0	0	19	30	954
% App. Total	0.5	98.6	0.7	0.2		26.7	0	46.7	26.7		4.1	93.8	1.9	0.3		36.7	0	0	63.3		
PHF	.750	.769	.333	.250	.775	.500	.000	.583	.333	.750	.464	.962	.500	.250	.976	.917	.000	.000	.432	.536	.837

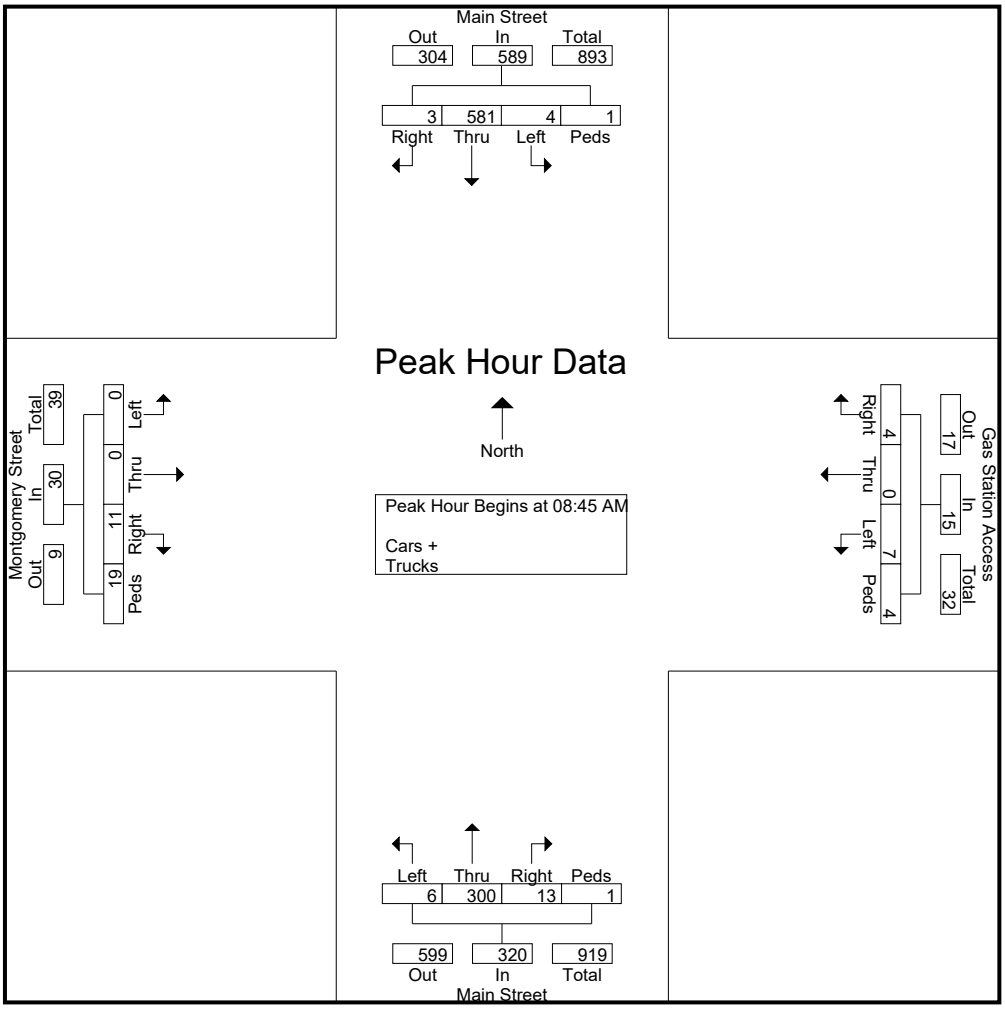

File Name : Blacksburg(Main and Montgomery)
Site Code :
Start Date : 11/14/2018
Page No : 4

	Main Street Southbound					Gas Station Access Westbound					Main Street Northbound					Montgomery Street Eastbound					
Start Time	Right	Thru	Left	Peds	App. Total	Right	Thru	Left	Peds	App. Total	Right	Thru	Left	Peds	App. Total	Right	Thru	Left	Peds	App. Total	Int. Total
Peak Hour Analysis From 12:00 PM to 06:45 PM - Peak 1 of 1																					
Peak Hour for Entire Intersection Begins at 04:45 PM																					
04:45 PM	1	151	1	0	153	2	0	0	3	5	3	140	9	0	152	6	0	1	4	11	321
05:00 PM	6	172	1	1	180	5	0	3	3	11	3	149	3	0	155	5	0	1	9	15	361
05:15 PM	6	142	4	0	152	6	0	0	0	6	3	145	8	0	156	8	0	1	4	13	327
05:30 PM	6	124	1	0	131	2	0	2	2	6	1	168	9	0	178	9	0	1	4	14	329
Total Volume	19	589	7	1	616	15	0	5	8	28	10	602	29	0	641	28	0	4	21	53	1338
% App. Total	3.1	95.6	1.1	0.2		53.6	0	17.9	28.6		1.6	93.9	4.5	0		52.8	0	7.5	39.6		
PHF	.792	.856	.438	.250	.856	.625	.000	.417	.667	.636	.833	.896	.806	.000	.900	.778	.000	1.00	.583	.883	.927

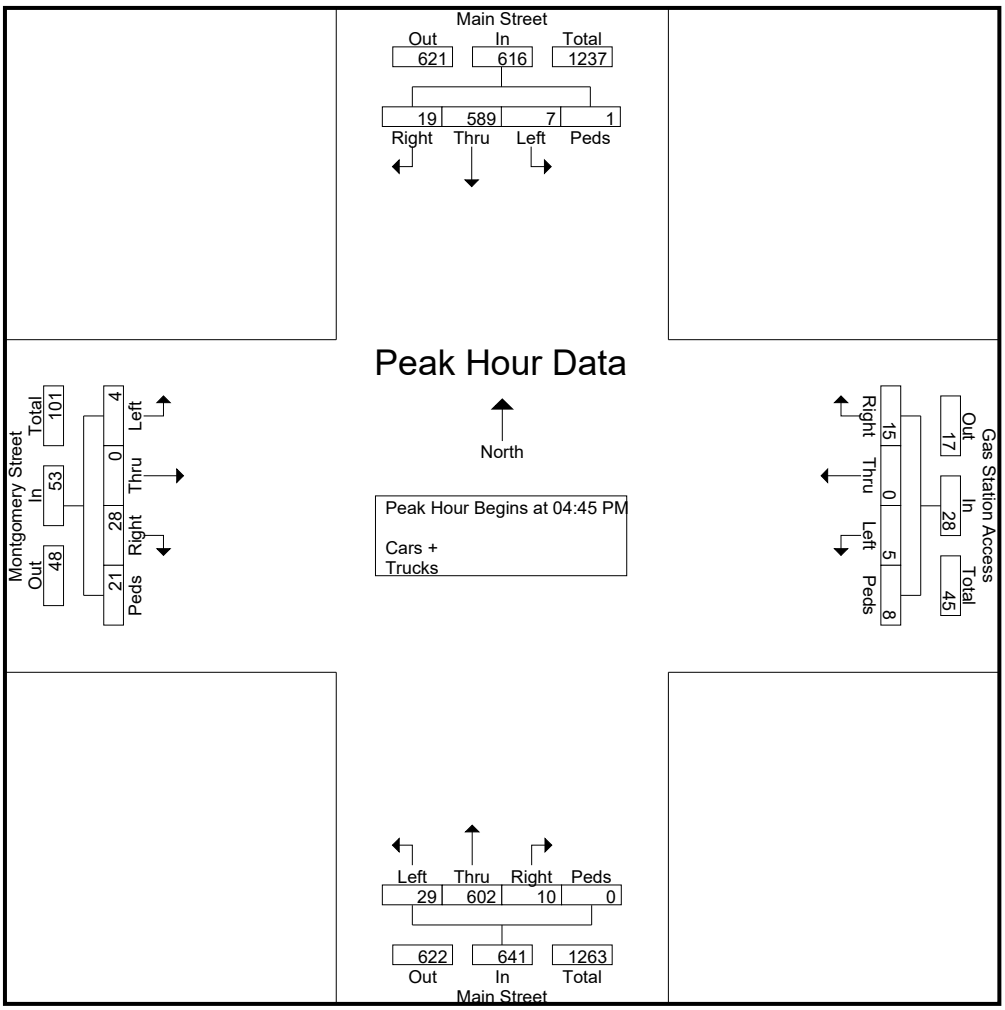

File Name : Blacksburg(Main and YMCA Access)
Site Code :
Start Date : 11/14/2018
Page No : 1

Groups Printed- Cars + - Trucks

	Main Street Southbound				YMCA Access Westbound				Main Street Northbound				
Start Time	Thru	Left	Peds	App. Total	Right	Left	Peds	App. Total	Right	Thru	Peds	App. Total	Int. Total
06:00 AM	23	0	0	23	0	0	0	0	0	29	0	29	52
06:15 AM	32	0	0	32	0	0	0	0	0	39	0	39	71
06:30 AM	53	0	0	53	0	0	0	0	0	25	0	25	78
06:45 AM	57	0	0	57	0	1	0	1	0	44	0	44	102
Total	165	0	0	165	0	1	0	1	0	137	0	137	303
07:00 AM	70	0	0	70	0	0	0	0	0	37	0	37	107
07:15 AM	102	0	0	102	0	0	0	0	0	51	0	51	153
07:30 AM	139	0	0	139	0	0	0	0	0	44	0	44	183
07:45 AM	191	0	0	191	0	0	0	0	0	42	0	42	233
Total	502	0	0	502	0	0	0	0	0	174	0	174	676
08:00 AM	122	0	0	122	0	0	0	0	0	51	0	51	173
08:15 AM	95	0	0	95	1	0	2	3	0	38	0	38	136
08:30 AM	133	1	0	134	0	0	4	4	0	55	0	55	193
08:45 AM	192	2	0	194	2	0	2	4	1	65	0	66	264
Total	542	3	0	545	3	0	8	11	1	209	0	210	766
09:00 AM	154	1	0	155	1	0	0	1	3	80	0	83	239
09:15 AM	117	2	0	119	1	1	0	2	2	68	0	70	191
09:30 AM	117	2	0	119	0	4	1	5	1	67	0	68	192
09:45 AM	144	1	0	145	0	3	1	4	0	60	0	60	209
Total	532	6	0	538	2	8	2	12	6	275	0	281	831
10:00 AM	118	3	0	121	2	2	3	7	5	91	0	96	224
10:15 AM	82	3	0	85	3	1	1	5	1	90	0	91	181
10:30 AM	112	1	0	113	2	3	0	5	2	68	0	70	188
10:45 AM	113	1	0	114	1	3	2	6	5	68	0	73	193
Total	425	8	0	433	8	9	6	23	13	317	0	330	786
11:00 AM	128	2	0	130	9	2	1	12	4	79	0	83	225
11:15 AM	102	2	0	104	0	0	1	1	1	90	0	91	196
11:30 AM	112	1	0	113	1	1	1	3	5	84	0	89	205
11:45 AM	149	1	0	150	2	3	4	9	1	102	1	104	263
Total	491	6	0	497	12	6	7	25	11	355	1	367	889
12:00 PM	148	3	0	151	3	1	0	4	3	103	0	106	261
12:15 PM	128	2	0	130	6	1	4	11	0	139	0	139	280
12:30 PM	116	1	0	117	4	2	2	8	1	116	0	117	242
12:45 PM	134	1	0	135	1	5	2	8	3	106	0	109	252
Total	526	7	0	533	14	9	8	31	7	464	0	471	1035
01:00 PM	147	1	0	148	2	2	2	6	2	111	0	113	267
01:15 PM	100	3	0	103	2	5	1	8	2	119	0	121	232
01:30 PM	111	1	0	112	2	2	1	5	2	93	0	95	212
01:45 PM	109	1	0	110	5	1	0	6	3	108	0	111	227
Total	467	6	0	473	11	10	4	25	9	431	0	440	938
02:00 PM	110	1	0	111	4	1	1	6	2	92	0	94	211
02:15 PM	110	1	1	112	2	7	1	10	1	138	0	139	261
02:30 PM	86	2	0	88	2	2	2	6	1	112	0	113	207
02:45 PM	106	2	0	108	5	1	1	7	4	97	0	101	216
Total	412	6	1	419	13	11	5	29	8	439	0	447	895
03:00 PM	97	2	0	99	3	3	4	10	3	109	0	112	221
03:15 PM	100	1	0	101	3	1	1	5	3	111	0	114	220
03:30 PM	169	1	0	170	3	2	0	5	0	118	0	118	293
03:45 PM	151	1	0	152	1	0	2	3	3	126	0	129	284
Total	517	5	0	522	10	6	7	23	9	464	0	473	1018

File Name : Blacksburg(Main and YMCA Access)
Site Code :
Start Date : 11/14/2018
Page No : 2

Groups Printed- Cars + - Trucks

	Main Street Southbound				YMCA Access Westbound				Main Street Northbound				
Start Time	Thru	Left	Peds	App. Total	Right	Left	Peds	App. Total	Right	Thru	Peds	App. Total	Int. Total
04:00 PM	100	1	0	101	1	1	0	2	3	163	0	166	269
04:15 PM	122	0	0	122	3	1	0	4	4	127	0	131	257
04:30 PM	138	1	0	139	2	1	0	3	1	151	0	152	294
04:45 PM	163	1	0	164	1	3	2	6	1	140	0	141	311
Total	523	3	0	526	7	6	2	15	9	581	0	590	1131
05:00 PM	202	1	0	203	1	0	4	5	1	139	0	140	348
05:15 PM	176	0	0	176	2	3	0	5	1	152	0	153	334
05:30 PM	135	0	0	135	5	4	2	11	2	201	0	203	349
05:45 PM	148	1	0	149	2	0	3	5	2	147	0	149	303
Total	661	2	0	663	10	7	9	26	6	639	0	645	1334
06:00 PM	151	1	0	152	2	0	1	3	0	148	0	148	303
06:15 PM	157	1	0	158	1	0	1	2	3	130	0	133	293
06:30 PM	143	1	0	144	1	2	1	4	1	132	0	133	281
06:45 PM	132	0	0	132	2	2	2	6	0	126	0	126	264
Total	583	3	0	586	6	4	5	15	4	536	0	540	1141
Grand Total	6346	55	1	6402	96	77	63	236	83	5021	1	5105	11743
Apprch %	99.1	0.9	0		40.7	32.6	26.7		1.6	98.4	0		
Total %	54	0.5	0	54.5	0.8	0.7	0.5	2	0.7	42.8	0	43.5	
Cars +	6255	55	1	6311	96	77	63	236	83	4881	1	4965	11512
% Cars +	98.6	100	100	98.6	100	100	100	100	100	97.2	100	97.3	98
Trucks	91	0	0	91	0	0	0	0	0	140	0	140	231
% Trucks	1.4	0	0	1.4	0	0	0	0	0	2.8	0	2.7	2

File Name : Blacksburg(Main and YMCA Access)
Site Code :
Start Date : 11/14/2018
Page No : 3

	Main Street Southbound				YMCA Access Westbound				Main Street Northbound				
Start Time	Thru	Left	Peds	App. Total	Right	Left	Peds	App. Total	Right	Thru	Peds	App. Total	Int. Total
Peak Hour Analysis From 06:00 AM to 11:45 AM - Peak 1 of 1													
Peak Hour for Entire Intersection Begins at 11:00 AM													
11:00 AM	128	2	0	130	9	2	1	12	4	79	0	83	225
11:15 AM	102	2	0	104	0	0	1	1	1	90	0	91	196
11:30 AM	112	1	0	113	1	1	1	3	5	84	0	89	205
11:45 AM	149	1	0	150	2	3	4	9	1	102	1	104	263
Total Volume	491	6	0	497	12	6	7	25	11	355	1	367	889
% App. Total	98.8	1.2	0		48	24	28		3	96.7	0.3		
PHF	.824	.750	.000	.828	.333	.500	.438	.521	.550	.870	.250	.882	.845

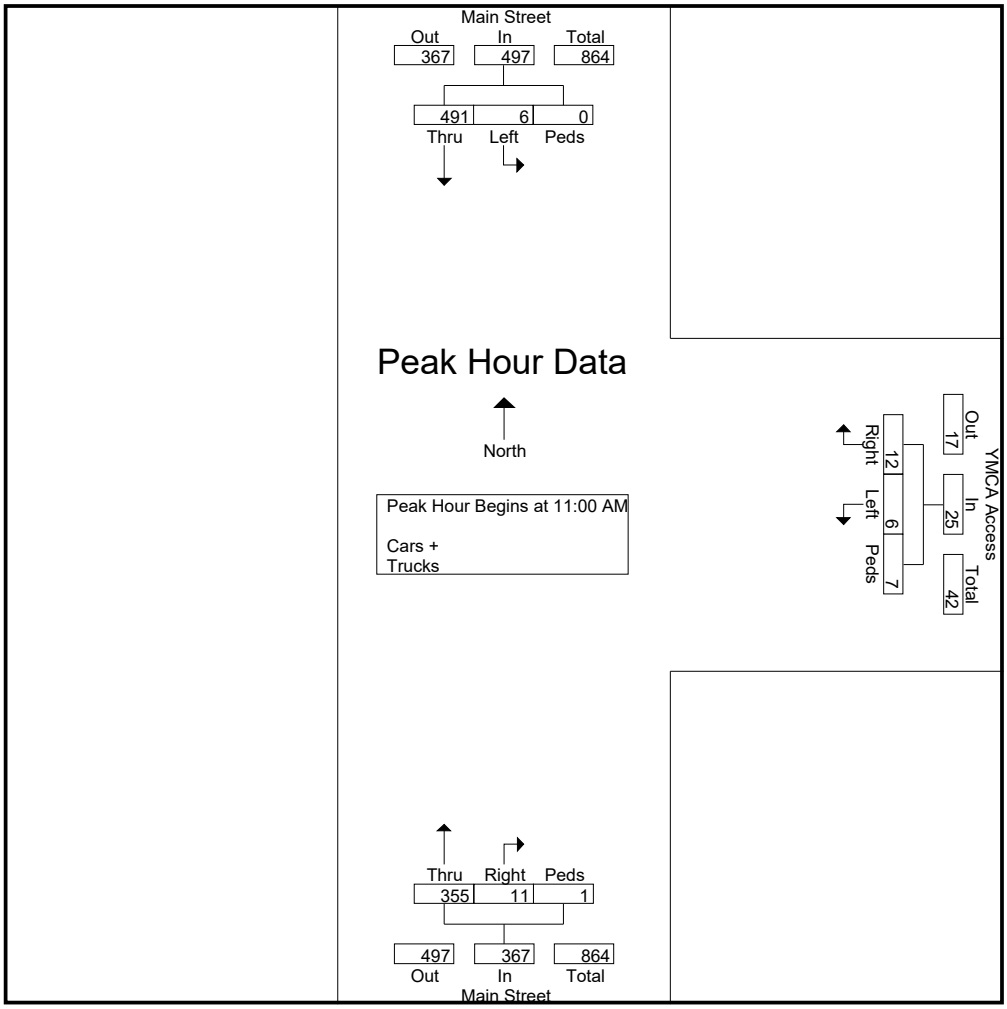

File Name : Blacksburg(Main and YMCA Access)
Site Code :
Start Date : 11/14/2018
Page No : 4

	Main Street Southbound				YMCA Access Westbound				Main Street Northbound				
Start Time	Thru	Left	Peds	App. Total	Right	Left	Peds	App. Total	Right	Thru	Peds	App. Total	Int. Total
Peak Hour Analysis From 12:00 PM to 06:45 PM - Peak 1 of 1													
Peak Hour for Entire Intersection Begins at 04:45 PM													
04:45 PM	163	1	0	164	1	3	2	6	1	140	0	141	311
05:00 PM	202	1	0	203	1	0	4	5	1	139	0	140	348
05:15 PM	176	0	0	176	2	3	0	5	1	152	0	153	334
05:30 PM	135	0	0	135	5	4	2	11	2	201	0	203	349
Total Volume	676	2	0	678	9	10	8	27	5	632	0	637	1342
% App. Total	99.7	0.3	0		33.3	37	29.6		0.8	99.2	0		
PHF	.837	.500	.000	.835	.450	.625	.500	.614	.625	.786	.000	.784	.961

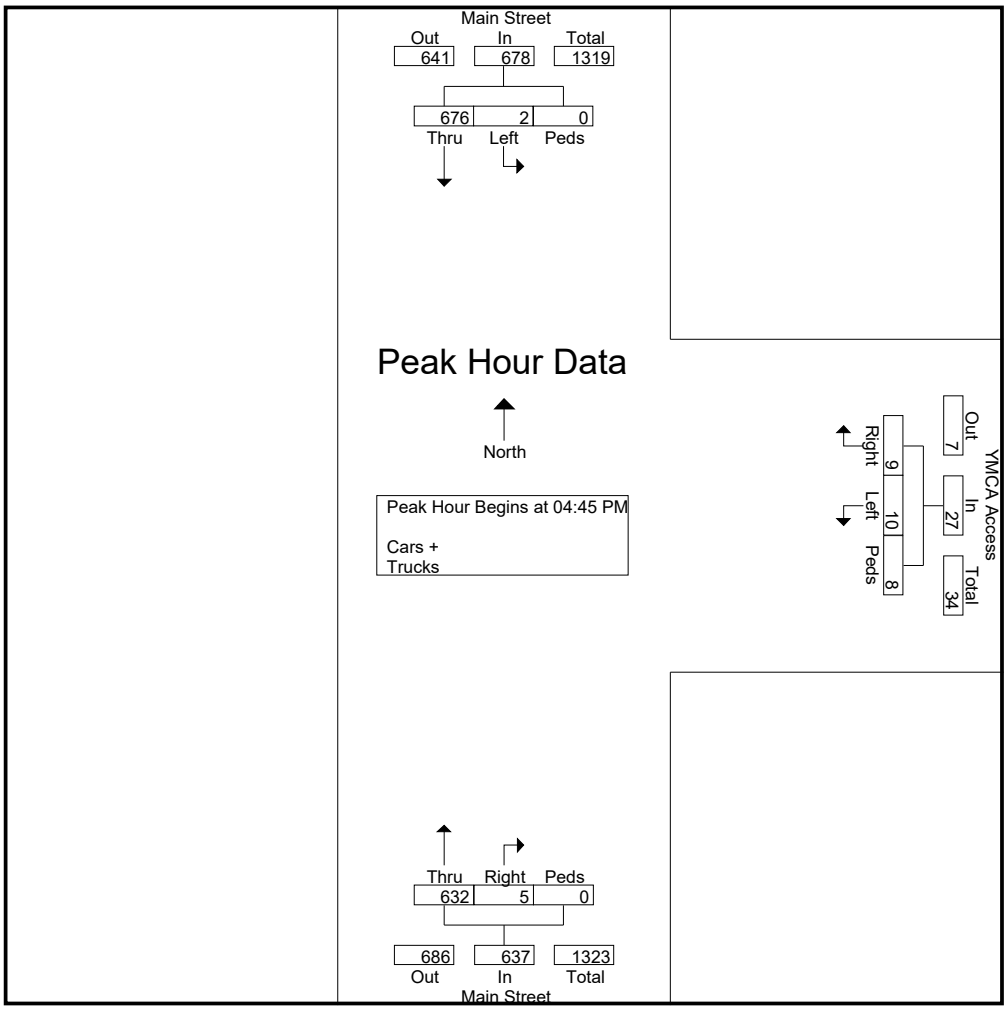

File Name : Blacksburg(Main and Lucas)
Site Code :
Start Date : 11/14/2018
Page No : 1

Groups Printed- Cars + - Trucks

	Main Street Southbound					Lucas Drive Westbound					Main Street Northbound					Lucas Drive Eastbound					
Start Time	Right	Thru	Left	Peds	App. Total	Right	Thru	Left	Peds	App. Total	Right	Thru	Left	Peds	App. Total	Right	Thru	Left	Peds	App. Total	Int. Total
06:00 AM	0	24	0	0	24	0	0	1	0	1	0	29	0	0	29	0	0	0	0	0	54
06:15 AM	0	34	0	0	34	1	0	0	0	1	0	41	0	0	41	0	0	0	0	0	76
06:30 AM	0	53	1	0	54	1	0	2	0	3	0	23	0	0	23	0	0	0	2	2	82
06:45 AM	0	57	0	0	57	3	0	1	0	4	0	46	0	1	47	0	0	0	1	1	109
Total	0	168	1	0	169	5	0	4	0	9	0	139	0	1	140	0	0	0	3	3	321
07:00 AM	0	63	1	0	64	0	0	1	1	2	1	34	0	0	35	0	0	0	3	3	104
07:15 AM	0	109	1	0	110	0	0	4	1	5	2	53	0	0	55	0	0	0	0	0	170
07:30 AM	0	150	1	0	151	0	0	3	1	4	1	44	0	0	45	0	0	0	1	1	201
07:45 AM	0	173	1	0	174	1	0	5	0	6	4	45	0	0	49	0	0	0	2	2	231
Total	0	495	4	0	499	1	0	13	3	17	8	176	0	0	184	0	0	0	6	6	706
08:00 AM	0	100	2	0	102	1	0	3	1	5	2	44	1	0	47	0	0	0	0	0	154
08:15 AM	0	104	0	0	104	0	0	2	0	2	3	35	0	0	38	0	0	0	0	0	144
08:30 AM	0	158	3	0	161	1	0	1	0	2	1	63	0	0	64	0	0	0	3	3	230
08:45 AM	4	192	0	1	197	6	0	1	2	9	3	78	1	0	82	1	0	0	12	13	301
Total	4	554	5	1	564	8	0	7	3	18	9	220	2	0	231	1	0	0	15	16	829
09:00 AM	1	152	2	0	155	2	0	3	0	5	3	66	2	0	71	5	0	1	3	9	240
09:15 AM	0	118	1	0	119	1	0	2	0	3	2	69	1	0	72	0	0	0	3	3	197
09:30 AM	0	122	2	0	124	2	0	0	0	2	3	69	0	0	72	0	0	0	3	3	201
09:45 AM	1	156	0	0	157	1	0	1	1	3	2	59	0	0	61	0	0	0	3	3	224
Total	2	548	5	0	555	6	0	6	1	13	10	263	3	0	276	5	0	1	12	18	862
10:00 AM	2	98	2	0	102	1	0	2	0	3	2	108	1	1	112	2	0	0	3	5	222
10:15 AM	0	97	2	0	99	5	0	0	1	6	5	86	0	0	91	2	0	1	2	5	201
10:30 AM	0	104	2	0	106	2	0	0	0	2	2	71	0	0	73	0	0	0	1	1	182
10:45 AM	0	116	1	0	117	0	0	4	3	7	2	72	0	0	74	0	0	0	4	4	202
Total	2	415	7	0	424	8	0	6	4	18	11	337	1	1	350	4	0	1	10	15	807
11:00 AM	0	112	4	1	117	1	0	4	1	6	6	108	1	0	115	0	0	0	3	3	241
11:15 AM	0	105	3	2	110	1	0	1	0	2	2	94	0	1	97	0	0	0	1	1	210
11:30 AM	0	124	3	0	127	1	0	1	1	3	3	84	0	0	87	0	0	0	1	1	218
11:45 AM	0	155	5	0	160	5	0	3	2	10	4	98	2	0	104	0	0	0	1	1	275
Total	0	496	15	3	514	8	0	9	4	21	15	384	3	1	403	0	0	0	6	6	944
12:00 PM	2	151	2	0	155	2	0	3	0	5	3	119	4	0	126	1	0	0	4	5	291
12:15 PM	0	115	1	0	116	4	0	1	2	7	4	140	1	0	145	6	0	1	7	14	282
12:30 PM	2	120	0	0	122	2	0	3	1	6	5	119	0	0	124	2	0	1	2	5	257
12:45 PM	3	143	0	0	146	2	0	1	1	4	3	108	2	1	114	1	0	0	0	1	265
Total	7	529	3	0	539	10	0	8	4	22	15	486	7	1	509	10	0	2	13	25	1095
01:00 PM	0	145	3	0	148	6	0	2	0	8	3	107	1	0	111	1	0	1	0	2	269
01:15 PM	0	105	2	0	107	2	0	2	1	5	2	127	1	1	131	1	0	0	3	4	247
01:30 PM	1	122	1	1	125	3	0	0	1	4	5	90	0	0	95	1	0	1	1	3	227
01:45 PM	2	109	0	0	111	0	0	1	0	1	3	103	3	0	109	0	0	3	1	4	225
Total	3	481	6	1	491	11	0	5	2	18	13	427	5	1	446	3	0	5	5	13	968
02:00 PM	0	124	3	0	127	3	0	3	0	6	6	108	0	0	114	4	0	0	4	8	255
02:15 PM	2	105	2	1	110	3	0	1	0	4	3	144	0	1	148	0	0	1	1	2	264
02:30 PM	1	87	0	0	88	3	0	4	1	8	4	106	0	0	110	1	0	0	4	5	211
02:45 PM	2	103	0	0	105	1	0	4	1	6	8	107	0	0	115	0	0	0	3	3	229
Total	5	419	5	1	430	10	0	12	2	24	21	465	0	1	487	5	0	1	12	18	959
03:00 PM	1	99	2	0	102	1	0	4	2	7	4	115	1	0	120	0	0	1	0	1	230
03:15 PM	0	101	1	0	102	2	0	0	2	4	2	120	0	0	122	1	0	0	2	3	231
03:30 PM	0	168	1	0	169	1	0	3	0	4	5	112	1	0	118	0	0	0	0	0	291
03:45 PM	7	131	1	0	139	1	0	5	2	8	4	129	5	0	138	2	0	0	5	7	292
Total	8	499	5	0	512	5	0	12	6	23	15	476	7	0	498	3	0	1	7	11	1044

File Name : Blacksburg(Main and Lucas)
Site Code :
Start Date : 11/14/2018
Page No : 2

Groups Printed- Cars + - Trucks

	Main Street Southbound					Lucas Drive Westbound					Main Street Northbound					Lucas Drive Eastbound					
Start Time	Right	Thru	Left	Peds	App. Total	Right	Thru	Left	Peds	App. Total	Right	Thru	Left	Peds	App. Total	Right	Thru	Left	Peds	App. Total	Int. Total
04:00 PM	6	104	3	0	113	3	0	1	1	5	4	157	12	0	173	6	0	3	1	10	301
04:15 PM	3	108	4	0	115	4	0	3	0	7	4	143	6	0	153	6	0	2	0	8	283
04:30 PM	0	146	3	0	149	2	0	5	1	8	4	153	0	0	157	1	0	1	1	3	317
04:45 PM	1	172	2	1	176	1	0	3	2	6	2	133	2	0	137	4	1	1	4	10	329
Total	10	530	12	1	553	10	0	12	4	26	14	586	20	0	620	17	1	7	6	31	1230
05:00 PM	5	195	3	0	203	4	0	1	2	7	3	149	1	0	153	3	0	1	9	13	376
05:15 PM	4	153	2	0	159	4	0	3	1	8	5	166	7	0	178	12	0	5	4	21	366
05:30 PM	1	135	0	0	136	0	0	2	2	4	4	193	4	0	201	0	0	0	4	4	345
05:45 PM	1	139	5	1	146	1	0	2	2	5	3	150	3	0	156	0	0	0	0	0	307
Total	11	622	10	1	644	9	0	8	7	24	15	658	15	0	688	15	0	6	17	38	1394
06:00 PM	8	157	2	0	167	3	0	2	0	5	6	140	5	0	151	3	0	0	5	8	331
06:15 PM	5	152	0	0	157	1	0	0	0	1	3	137	0	0	140	7	0	7	2	16	314
06:30 PM	6	140	3	0	149	0	0	2	0	2	0	134	4	0	138	2	0	3	0	5	294
06:45 PM	2	121	2	0	125	3	0	3	2	8	6	134	0	0	140	6	0	5	1	12	285
Total	21	570	7	0	598	7	0	7	2	16	15	545	9	0	569	18	0	15	8	41	1224
Grand Total	73	6326	85	8	6492	98	0	109	42	249	161	5162	72	6	5401	81	1	39	120	241	12383
Apprch %	1.1	97.4	1.3	0.1		39.4	0	43.8	16.9		3	95.6	1.3	0.1		33.6	0.4	16.2	49.8		
Total %	0.6	51.1	0.7	0.1	52.4	0.8	0	0.9	0.3	2	1.3	41.7	0.6	0	43.6	0.7	0	0.3	1	1.9	
Cars +	73	6246	85	7	6411	98	0	109	32	239	93	5083	72	6	5254	81	1	39	87	208	12112
% Cars +	100	98.7	100	87.5	98.8	100	0	100	76.2	96	57.8	98.5	100	100	97.3	100	100	100	72.5	86.3	97.8
Trucks	0	80	0	1	81	0	0	0	10	10	68	79	0	0	147	0	0	0	33	33	271
% Trucks	0	1.3	0	12.5	1.2	0	0	0	23.8	4	42.2	1.5	0	0	2.7	0	0	0	27.5	13.7	2.2

File Name : Blacksburg(Main and Lucas)
Site Code :
Start Date : 11/14/2018
Page No : 3

	Main Street Southbound					Lucas Drive Westbound					Main Street Northbound					Lucas Drive Eastbound					
Start Time	Right	Thru	Left	Peds	App. Total	Right	Thru	Left	Peds	App. Total	Right	Thru	Left	Peds	App. Total	Right	Thru	Left	Peds	App. Total	Int. Total
Peak Hour Analysis From 06:00 AM to 11:45 AM - Peak 1 of 1																					
Peak Hour for Entire Intersection Begins at 08:30 AM																					
08:30 AM	0	158	3	0	161	1	0	1	0	2	1	63	0	0	64	0	0	0	3	3	230
08:45 AM	4	192	0	1	197	6	0	1	2	9	3	78	1	0	82	1	0	0	12	13	301
09:00 AM	1	152	2	0	155	2	0	3	0	5	3	66	2	0	71	5	0	1	3	9	240
09:15 AM	0	118	1	0	119	1	0	2	0	3	2	69	1	0	72	0	0	0	3	3	197
Total Volume	5	620	6	1	632	10	0	7	2	19	9	276	4	0	289	6	0	1	21	28	968
% App. Total	0.8	98.1	0.9	0.2		52.6	0	36.8	10.5		3.1	95.5	1.4	0		21.4	0	3.6	75		
PHF	.313	.807	.500	.250	.802	.417	.000	.583	.250	.528	.750	.885	.500	.000	.881	.300	.000	.250	.438	.538	.804

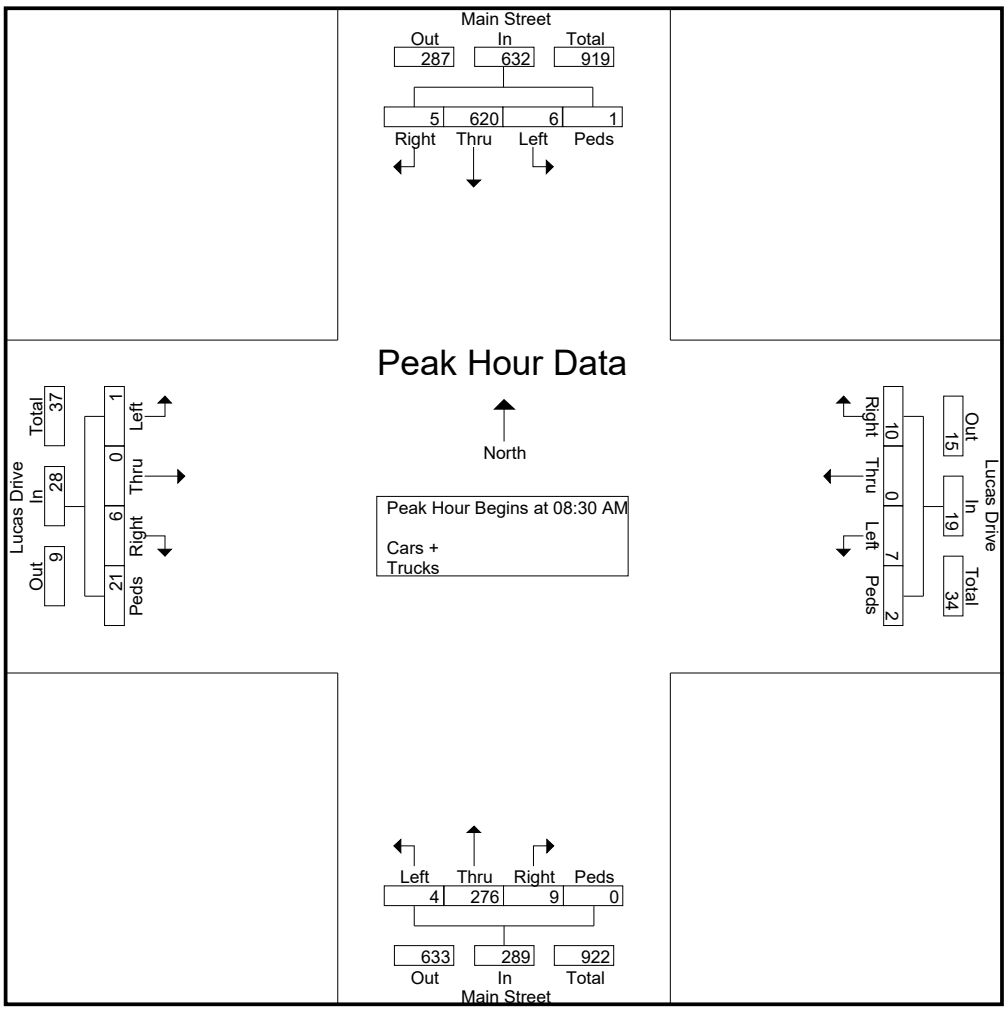

File Name : Blacksburg(Main and Lucas)
Site Code :
Start Date : 11/14/2018
Page No : 4

	Main Street Southbound					Lucas Drive Westbound					Main Street Northbound					Lucas Drive Eastbound					
Start Time	Right	Thru	Left	Peds	App. Total	Right	Thru	Left	Peds	App. Total	Right	Thru	Left	Peds	App. Total	Right	Thru	Left	Peds	App. Total	Int. Total
Peak Hour Analysis From 12:00 PM to 06:45 PM - Peak 1 of 1																					
Peak Hour for Entire Intersection Begins at 04:45 PM																					
04:45 PM	1	172	2	1	176	1	0	3	2	6	2	133	2	0	137	4	1	1	4	10	329
05:00 PM	5	195	3	0	203	4	0	1	2	7	3	149	1	0	153	3	0	1	9	13	376
05:15 PM	4	153	2	0	159	4	0	3	1	8	5	166	7	0	178	12	0	5	4	21	366
05:30 PM	1	135	0	0	136	0	0	2	2	4	4	193	4	0	201	0	0	0	4	4	345
Total Volume	11	655	7	1	674	9	0	9	7	25	14	641	14	0	669	19	1	7	21	48	1416
% App. Total	1.6	97.2	1	0.1		36	0	36	28		2.1	95.8	2.1	0		39.6	2.1	14.6	43.8		
PHF	.550	.840	.583	.250	.830	.563	.000	.750	.875	.781	.700	.830	.500	.000	.832	.396	.250	.350	.583	.571	.941

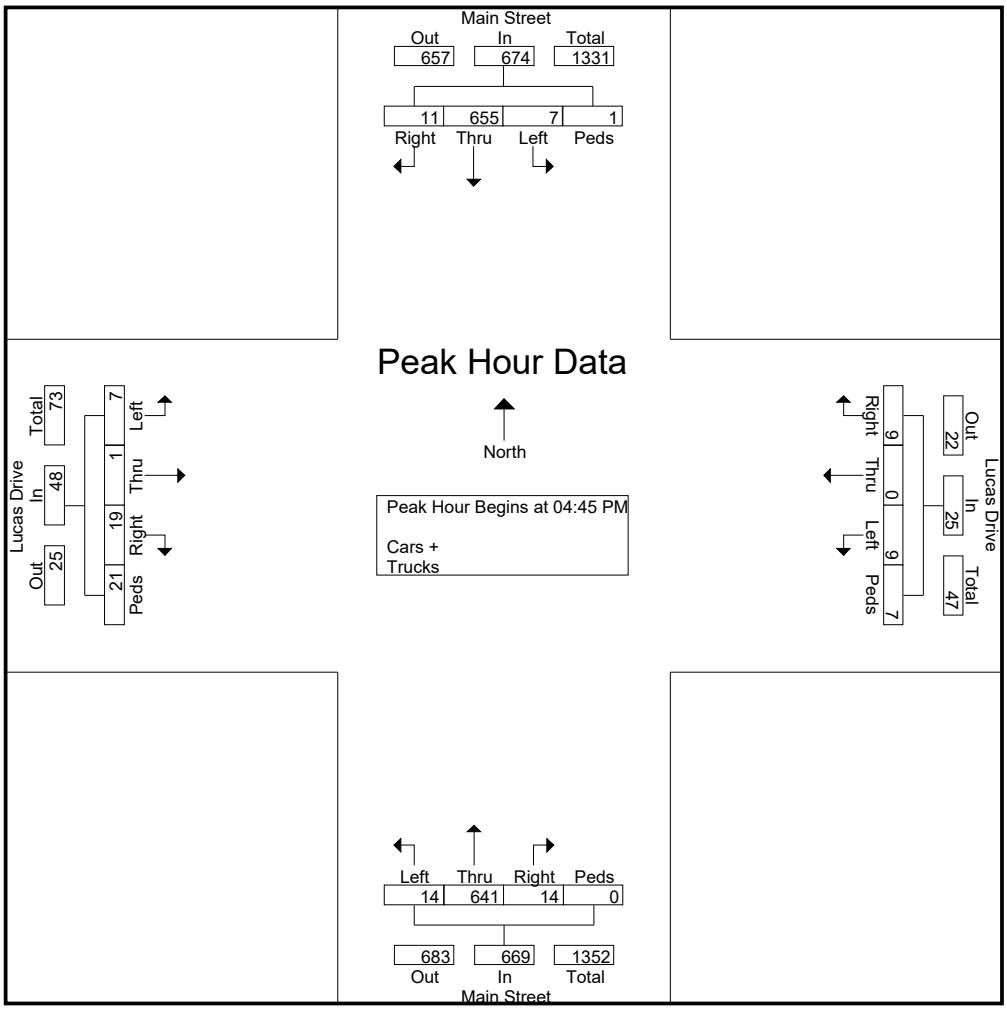

DAY 2

File Name : Blacksburg(Main and Progress) 2
Site Code :
Start Date : 11/27/2018
Page No : 1

Groups Printed- Cars + - Trucks

	Main Street Southbound					Progress Street Westbound					Main Street Northbound					Progress Street Eastbound					
Start Time	Right	Thru	Left	Peds	App. Total	Right	Thru	Left	Peds	App. Total	Right	Thru	Left	Peds	App. Total	Right	Thru	Left	Peds	App. Total	Int. Total
06:00 AM	0	20	0	0	20	1	0	1	0	2	0	33	1	0	34	2	0	0	2	4	60
06:15 AM	0	37	0	0	37	2	1	0	1	4	0	34	0	0	34	3	0	0	0	3	78
06:30 AM	0	58	0	0	58	1	0	0	1	2	0	32	1	0	33	8	1	0	1	10	103
06:45 AM	0	47	0	0	47	0	0	1	0	1	0	54	1	0	55	7	1	2	0	10	113
Total	0	162	0	0	162	4	1	2	2	9	0	153	3	0	156	20	2	2	3	27	354
07:00 AM	0	59	1	1	61	0	0	2	0	2	0	44	1	0	45	9	0	0	0	9	117
07:15 AM	2	101	0	0	103	1	0	2	2	5	0	33	5	0	38	10	3	1	2	16	162
07:30 AM	1	191	3	4	199	0	2	2	3	7	2	41	1	0	44	18	4	1	4	27	277
07:45 AM	1	216	0	2	219	0	0	4	7	11	2	47	6	0	55	15	3	0	5	23	308
Total	4	567	4	7	582	1	2	10	12	25	4	165	13	0	182	52	10	2	11	75	864
08:00 AM	1	113	3	2	119	3	0	1	0	4	1	63	4	0	68	13	5	2	7	27	218
08:15 AM	2	106	1	0	109	1	2	3	0	6	1	44	7	0	52	19	1	3	1	24	191
08:30 AM	5	130	5	1	141	7	1	1	0	9	0	47	7	0	54	14	2	0	7	23	227
08:45 AM	7	140	8	6	161	4	3	4	0	11	3	49	4	0	56	20	2	2	2	26	254
Total	15	489	17	9	530	15	6	9	0	30	5	203	22	0	230	66	10	7	17	100	890
09:00 AM	5	152	5	3	165	2	2	6	3	13	4	57	10	0	71	25	6	2	3	36	285
09:15 AM	1	142	3	2	148	6	4	2	3	15	3	76	12	0	91	29	3	5	6	43	297
09:30 AM	5	80	4	1	90	9	12	3	4	28	4	68	7	0	79	12	2	4	2	20	217
09:45 AM	3	98	0	2	103	4	2	2	1	9	1	57	13	0	71	20	2	3	4	29	212
Total	14	472	12	8	506	21	20	13	11	65	12	258	42	0	312	86	13	14	15	128	1011
10:00 AM	0	82	3	1	86	4	1	4	2	11	3	59	11	0	73	14	4	3	1	22	192
10:15 AM	0	98	1	3	102	2	2	2	1	7	1	57	9	0	67	20	4	1	1	26	202
10:30 AM	3	116	2	1	122	4	2	7	2	15	1	70	15	0	86	24	4	2	3	33	256
10:45 AM	0	125	4	2	131	5	2	4	2	13	5	83	8	1	97	24	5	2	3	34	275
Total	3	421	10	7	441	15	7	17	7	46	10	269	43	1	323	82	17	8	8	115	925
11:00 AM	5	92	4	1	102	5	4	3	1	13	3	107	12	0	122	10	2	4	1	17	254
11:15 AM	4	88	5	1	98	4	2	4	2	12	0	67	10	0	77	13	1	1	3	18	205
11:30 AM	5	101	3	0	109	3	3	2	0	8	1	77	8	2	88	15	1	4	0	20	225
11:45 AM	2	107	5	1	115	3	1	7	1	12	5	79	13	0	97	14	1	7	0	22	246
Total	16	388	17	3	424	15	10	16	4	45	9	330	43	2	384	52	5	16	4	77	930
12:00 PM	2	134	3	3	142	6	8	5	6	25	6	101	12	0	119	14	3	6	1	24	310
12:15 PM	2	142	5	1	150	12	4	7	1	24	3	115	15	0	133	25	3	3	3	34	341
12:30 PM	1	83	2	0	86	6	9	6	2	23	3	126	21	1	151	25	6	5	0	36	296
12:45 PM	6	111	1	2	120	5	1	6	0	12	6	116	18	0	140	21	2	3	0	26	298
Total	11	470	11	6	498	29	22	24	9	84	18	458	66	1	543	85	14	17	4	120	1245
01:00 PM	3	106	1	0	110	7	3	3	1	14	1	86	12	0	99	19	6	3	0	28	251
01:15 PM	7	95	4	3	109	5	5	5	2	17	4	76	11	0	91	21	2	4	3	30	247
01:30 PM	5	150	1	0	156	5	2	2	2	11	8	99	10	0	117	17	5	2	6	30	314
01:45 PM	1	119	0	1	121	2	2	9	2	15	3	100	16	0	119	26	5	6	5	42	297
Total	16	470	6	4	496	19	12	19	7	57	16	361	49	0	426	83	18	15	14	130	1109
02:00 PM	5	77	5	2	89	5	3	3	2	13	4	111	14	0	129	16	5	0	1	22	253
02:15 PM	6	66	4	0	76	7	8	4	0	19	5	88	16	2	111	18	4	4	0	26	232
02:30 PM	3	82	0	0	85	5	2	3	1	11	5	83	17	0	105	7	5	5	0	17	218
02:45 PM	1	77	1	2	81	8	3	7	2	20	3	89	10	0	102	21	4	4	0	29	232
Total	15	302	10	4	331	25	16	17	5	63	17	371	57	2	447	62	18	13	1	94	935
03:00 PM	3	110	3	1	117	5	9	7	1	22	4	101	18	0	123	24	4	5	0	33	295
03:15 PM	1	90	1	1	93	12	4	5	5	26	1	103	20	0	124	27	7	3	5	42	285
03:30 PM	4	106	2	2	114	4	7	3	2	16	2	133	13	0	148	20	3	2	2	27	305
03:45 PM	4	101	2	1	108	7	4	5	2	18	4	106	15	0	125	20	7	9	3	39	290
Total	12	407	8	5	432	28	24	20	10	82	11	443	66	0	520	91	21	19	10	141	1175

File Name : Blacksburg(Main and Progress) 2
Site Code :
Start Date : 11/27/2018
Page No : 2

Groups Printed- Cars + - Trucks

	Main Street Southbound					Progress Street Westbound					Main Street Northbound					Progress Street Eastbound					
Start Time	Right	Thru	Left	Peds	App. Total	Right	Thru	Left	Peds	App. Total	Right	Thru	Left	Peds	App. Total	Right	Thru	Left	Peds	App. Total	Int. Total
04:00 PM	2	99	6	1	108	7	4	3	1	15	8	112	17	0	137	23	8	3	1	35	295
04:15 PM	1	103	7	1	112	10	2	2	2	16	5	102	17	0	124	19	7	2	0	28	280
04:30 PM	1	120	5	1	127	8	6	10	3	27	2	94	11	0	107	27	3	5	5	40	301
04:45 PM	0	129	1	4	134	5	8	4	2	19	3	113	14	0	130	35	6	8	1	50	333
Total	4	451	19	7	481	30	20	19	8	77	18	421	59	0	498	104	24	18	7	153	1209
05:00 PM	4	108	3	4	119	9	14	4	5	32	6	130	22	0	158	32	10	10	3	55	364
05:15 PM	4	121	6	0	131	14	13	6	0	33	4	132	24	0	160	30	9	9	0	48	372
05:30 PM	3	114	6	1	124	12	13	6	5	36	7	121	29	0	157	31	4	4	0	39	356
05:45 PM	3	131	7	0	141	10	6	6	2	24	4	135	20	0	159	23	5	6	0	34	358
Total	14	474	22	5	515	45	46	22	12	125	21	518	95	0	634	116	28	29	3	176	1450
06:00 PM	0	118	5	0	123	15	12	7	1	35	3	103	26	0	132	25	8	5	1	39	329
06:15 PM	4	113	9	2	128	10	7	8	2	27	4	135	22	0	161	25	5	0	1	31	347
06:30 PM	5	92	7	1	105	11	5	9	1	26	8	146	20	0	174	27	9	0	0	36	341
06:45 PM	0	119	6	0	125	11	5	5	2	23	11	125	23	0	159	29	9	4	4	46	353
Total	9	442	27	3	481	47	29	29	6	111	26	509	91	0	626	106	31	9	6	152	1370
Grand Total	133	5515	163	68	5879	294	215	217	93	819	167	4459	649	6	5281	1005	211	169	103	1488	13467
Apprch %	2.3	93.8	2.8	1.2		35.9	26.3	26.5	11.4		3.2	84.4	12.3	0.1		67.5	14.2	11.4	6.9		
Total %	1	41	1.2	0.5	43.7	2.2	1.6	1.6	0.7	6.1	1.2	33.1	4.8	0	39.2	7.5	1.6	1.3	0.8	11	
Cars +	133	5506	163	61	5863	294	215	217	79	805	167	4454	649	5	5275	1005	211	169	82	1467	13410
% Cars +	100	99.8	100	89.7	99.7	100	100	100	84.9	98.3	100	99.9	100	83.3	99.9	100	100	100	79.6	98.6	99.6
Trucks	0	9	0	7	16	0	0	0	14	14	0	5	0	1	6	0	0	0	21	21	57
% Trucks	0	0.2	0	10.3	0.3	0	0	0	15.1	1.7	0	0.1	0	16.7	0.1	0	0	0	20.4	1.4	0.4

File Name : Blacksburg(Main and Progress) 2
Site Code :
Start Date : 11/27/2018
Page No : 3

	Main Street Southbound					Progress Street Westbound					Main Street Northbound					Progress Street Eastbound					
Start Time	Right	Thru	Left	Peds	App. Total	Right	Thru	Left	Peds	App. Total	Right	Thru	Left	Peds	App. Total	Right	Thru	Left	Peds	App. Total	Int. Total
Peak Hour Analysis From 06:00 AM to 11:45 AM - Peak 1 of 1																					
Peak Hour for Entire Intersection Begins at 08:30 AM																					
08:30 AM	5	130	5	1	141	7	1	1	0	9	0	47	7	0	54	14	2	0	7	23	227
08:45 AM	7	140	8	6	161	4	3	4	0	11	3	49	4	0	56	20	2	2	2	26	254
09:00 AM	5	152	5	3	165	2	2	6	3	13	4	57	10	0	71	25	6	2	3	36	285
09:15 AM	1	142	3	2	148	6	4	2	3	15	3	76	12	0	91	29	3	5	6	43	297
Total Volume	18	564	21	12	615	19	10	13	6	48	10	229	33	0	272	88	13	9	18	128	1063
% App. Total																					
PHF	.643	.928	.656	.500	.932	.679	.625	.542	.500	.800	.625	.753	.688	.000	.747	.759	.542	.450	.643	.744	.895

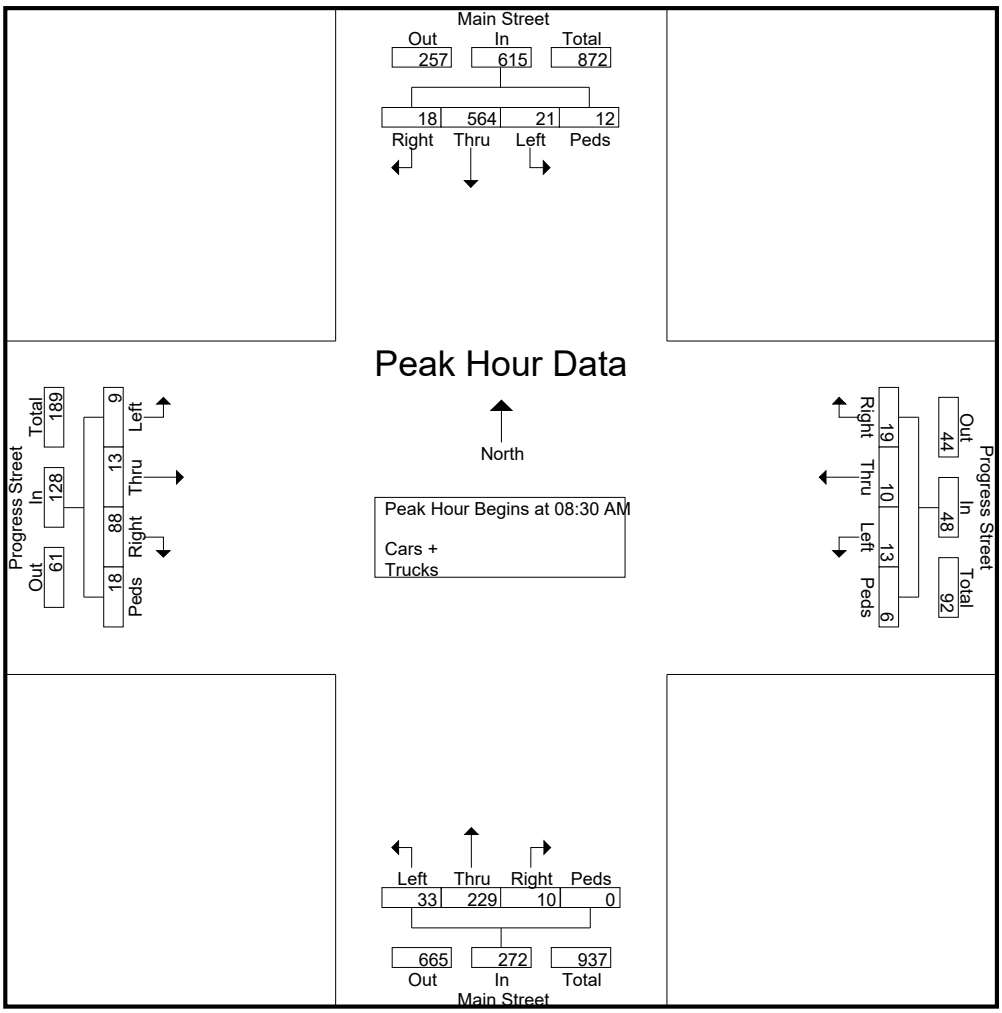

File Name : Blacksburg(Main and Progress) 2
Site Code :
Start Date : 11/27/2018
Page No : 4

	Main Street Southbound					Progress Street Westbound					Main Street Northbound					Progress Street Eastbound					
Start Time	Right	Thru	Left	Peds	App. Total	Right	Thru	Left	Peds	App. Total	Right	Thru	Left	Peds	App. Total	Right	Thru	Left	Peds	App. Total	Int. Total
Peak Hour Analysis From 12:00 PM to 07:00 PM - Peak 1 of 1																					
Peak Hour for Entire Intersection Begins at 05:00 PM																					
05:00 PM	4	108	3	4	119	9	14	4	5	32	6	130	22	0	158	32	10	10	3	55	364
05:15 PM	4	121	6	0	131	14	13	6	0	33	4	132	24	0	160	30	9	9	0	48	372
05:30 PM	3	114	6	1	124	12	13	6	5	36	7	121	29	0	157	31	4	4	0	39	356
05:45 PM	3	131	7	0	141	10	6	6	2	24	4	135	20	0	159	23	5	6	0	34	358
Total Volume	14	474	22	5	515	45	46	22	12	125	21	518	95	0	634	116	28	29	3	176	1450
% App. Total																					
PHF	.875	.905	.786	.313	.913	.804	.821	.917	.600	.868	.750	.959	.819	.000	.991	.906	.700	.725	.250	.800	.974

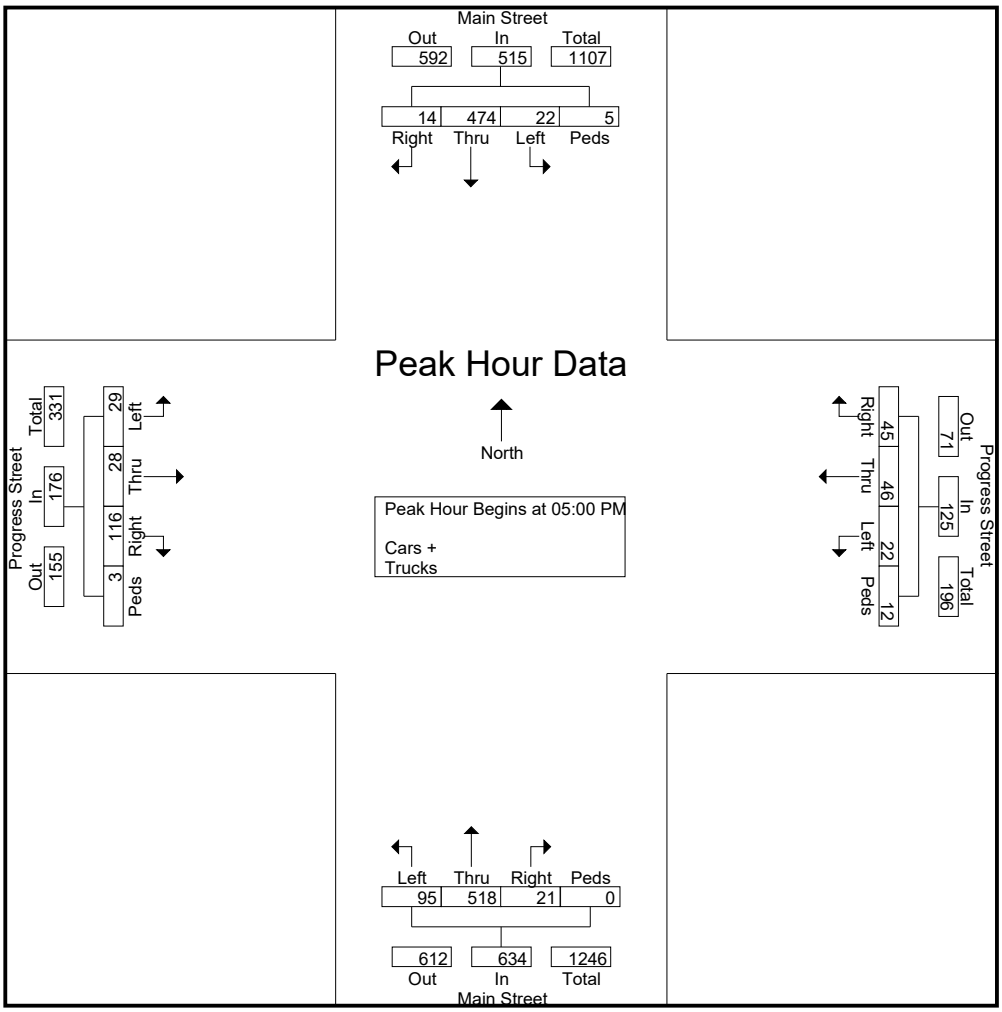

File Name : Blacksburg(Main and Patrick Henry) 2
Site Code :
Start Date : 11/28/2018
Page No : 1

Groups Printed- Cars + - Trucks

	Main Street Southbound					Patrick Henry Drive Westbound					Main Street Northbound					Patrick Henry Drive Eastbound					
Start Time	Right	Thru	Left	Peds	App. Total	Right	Thru	Left	Peds	App. Total	Right	Thru	Left	Peds	App. Total	Right	Thru	Left	Peds	App. Total	Int. Total
06:00 AM	4	32	5	0	41	3	3	2	0	8	1	10	1	0	12	7	4	9	0	20	81
06:15 AM	9	35	1	0	45	1	1	4	0	6	1	11	1	0	13	9	3	10	0	22	86
06:30 AM	11	51	4	0	66	2	8	3	0	13	3	15	2	0	20	4	3	8	1	16	115
06:45 AM	17	56	3	0	76	3	7	12	0	22	3	14	1	0	18	7	9	17	0	33	149
Total	41	174	13	0	228	9	19	21	0	49	8	50	5	0	63	27	19	44	1	91	431
07:00 AM	18	65	3	2	88	4	7	6	0	17	2	12	5	3	22	10	6	9	1	26	153
07:15 AM	27	87	5	0	119	3	16	13	0	32	5	21	4	0	30	12	6	13	0	31	212
07:30 AM	37	140	8	2	187	2	19	14	1	36	1	22	2	3	28	18	12	16	1	47	298
07:45 AM	32	123	12	0	167	5	29	16	0	50	4	22	4	0	30	27	10	12	1	50	297
Total	114	415	28	4	561	14	71	49	1	135	12	77	15	6	110	67	34	50	3	154	960
08:00 AM	19	96	3	2	120	4	28	13	0	45	9	22	5	0	36	18	10	12	2	42	243
08:15 AM	23	79	9	0	111	9	13	8	0	30	5	24	9	5	43	12	13	10	0	35	219
08:30 AM	26	128	10	0	164	2	20	10	1	33	3	25	7	6	41	21	9	10	1	41	279
08:45 AM	35	124	15	1	175	8	17	18	1	44	3	37	11	1	52	34	12	17	1	64	335
Total	103	427	37	3	570	23	78	49	2	152	20	108	32	12	172	85	44	49	4	182	1076
09:00 AM	30	90	12	0	132	8	21	13	0	42	3	46	18	1	68	10	17	11	0	38	280
09:15 AM	19	90	6	0	115	3	12	8	0	23	7	45	6	3	61	16	15	11	0	42	241
09:30 AM	18	69	11	2	100	7	16	8	0	31	8	25	6	8	47	20	8	10	2	40	218
09:45 AM	14	87	6	1	108	6	10	12	2	30	6	33	7	9	55	35	17	19	1	72	265
Total	81	336	35	3	455	24	59	41	2	126	24	149	37	21	231	81	57	51	3	192	1004
10:00 AM	12	67	10	0	89	6	8	11	0	25	14	40	20	4	78	14	10	8	0	32	224
10:15 AM	16	53	12	0	81	4	17	11	0	32	10	37	16	5	68	15	14	18	0	47	228
10:30 AM	21	59	10	0	90	6	19	7	1	33	8	30	6	5	49	12	18	8	0	38	210
10:45 AM	20	67	14	1	102	2	17	14	0	33	6	32	14	8	60	21	23	16	1	61	256
Total	69	246	46	1	362	18	61	43	1	123	38	139	56	22	255	62	65	50	1	178	918
11:00 AM	18	70	6	2	96	7	19	13	0	39	10	41	32	6	89	19	8	8	0	35	259
11:15 AM	20	75	8	2	105	6	24	6	1	37	7	42	24	0	73	18	12	16	0	46	261
11:30 AM	24	68	3	2	97	2	25	8	1	36	13	55	23	4	95	12	20	9	2	43	271
11:45 AM	26	64	10	1	101	13	24	8	0	45	7	57	18	7	89	24	19	17	2	62	297
Total	88	277	27	7	399	28	92	35	2	157	37	195	97	17	346	73	59	50	4	186	1088
12:00 PM	23	81	12	0	116	4	25	14	0	43	14	58	20	3	95	21	27	17	0	65	319
12:15 PM	20	55	5	1	81	15	12	7	1	35	9	60	33	6	108	19	8	21	0	48	272
12:30 PM	16	80	10	0	106	6	14	12	0	32	10	56	25	1	92	19	23	19	0	61	291
12:45 PM	20	70	7	0	97	3	26	13	0	42	7	55	22	5	89	24	32	20	1	77	305
Total	79	286	34	1	400	28	77	46	1	152	40	229	100	15	384	83	90	77	1	251	1187
01:00 PM	16	91	9	2	118	8	18	9	0	35	12	54	15	3	84	38	25	20	3	86	323
01:15 PM	15	82	11	0	108	7	19	16	0	42	22	83	31	4	140	24	14	9	0	47	337
01:30 PM	16	56	7	0	79	7	16	9	0	32	12	45	14	2	73	21	18	16	0	55	239
01:45 PM	23	63	8	3	97	8	14	9	1	32	8	56	18	8	90	19	19	22	2	62	281
Total	70	292	35	5	402	30	67	43	1	141	54	238	78	17	387	102	76	67	5	250	1180
02:00 PM	18	74	12	0	104	5	26	14	0	45	10	48	19	3	80	22	10	14	0	46	275
02:15 PM	20	56	6	2	84	8	19	9	1	37	10	49	25	0	84	24	21	18	0	63	268
02:30 PM	16	52	16	2	86	2	24	8	0	34	11	62	30	1	104	17	17	13	1	48	272
02:45 PM	18	54	13	0	85	8	20	4	1	33	9	58	26	1	94	21	18	17	0	56	268
Total	72	236	47	4	359	23	89	35	2	149	40	217	100	5	362	84	66	62	1	213	1083
03:00 PM	24	48	9	2	83	5	22	7	0	34	12	56	25	1	94	16	11	19	0	46	257
03:15 PM	24	61	10	1	96	15	16	10	0	41	6	81	18	2	107	26	29	18	3	76	320
03:30 PM	37	94	19	3	153	7	19	13	0	39	5	106	22	2	135	19	15	15	1	50	377
03:45 PM	30	76	9	3	118	11	25	8	1	45	14	77	37	4	132	23	18	21	0	62	357
Total	115	279	47	9	450	38	82	38	1	159	37	320	102	9	468	84	73	73	4	234	1311

File Name : Blacksburg(Main and Patrick Henry) 2
Site Code :
Start Date : 11/28/2018
Page No : 2

Groups Printed- Cars + - Trucks

	Main Street Southbound					Patrick Henry Drive Westbound					Main Street Northbound					Patrick Henry Drive Eastbound					
Start Time	Right	Thru	Left	Peds	App. Total	Right	Thru	Left	Peds	App. Total	Right	Thru	Left	Peds	App. Total	Right	Thru	Left	Peds	App. Total	Int. Total
04:00 PM	43	55	11	3	112	12	24	6	2	44	18	96	28	2	144	13	16	22	1	52	352
04:15 PM	34	52	12	1	99	12	32	17	0	61	13	94	32	1	140	24	25	17	0	66	366
04:30 PM	28	66	16	1	111	8	31	13	4	56	17	88	28	0	133	22	23	18	2	65	365
04:45 PM	32	70	19	1	122	5	30	16	0	51	18	75	34	0	127	38	25	20	0	83	383
Total	137	243	58	6	444	37	117	52	6	212	66	353	122	3	544	97	89	77	3	266	1466
05:00 PM	40	93	14	1	148	13	43	20	0	76	15	102	32	9	158	44	35	19	0	98	480
05:15 PM	34	91	25	1	151	11	36	16	0	63	22	104	52	2	180	35	35	27	1	98	492
05:30 PM	37	81	17	3	138	12	38	14	1	65	15	110	41	3	169	29	33	29	0	91	463
05:45 PM	20	59	21	2	102	7	31	15	0	53	13	96	25	5	139	45	38	26	1	110	404
Total	131	324	77	7	539	43	148	65	1	257	65	412	150	19	646	153	141	101	2	397	1839
06:00 PM	27	70	14	2	113	17	30	14	0	61	15	84	33	0	132	25	30	26	0	81	387
06:15 PM	16	62	10	0	88	9	20	13	1	43	17	75	29	4	125	37	32	19	2	90	346
06:30 PM	16	71	14	0	101	10	28	18	0	56	12	63	33	0	108	29	38	21	0	88	353
06:45 PM	13	74	11	10	108	6	32	14	0	52	22	84	28	2	136	47	24	20	2	93	389
Total	72	277	49	12	410	42	110	59	1	212	66	306	123	6	501	138	124	86	4	352	1475
Grand Total	1172	3812	533	62	5579	357	1070	576	21	2024	507	2793	1017	152	4469	1136	937	837	36	2946	15018
Apprch %	21	68.3	9.6	1.1		17.6	52.9	28.5	1		11.3	62.5	22.8	3.4		38.6	31.8	28.4	1.2		
Total %	7.8	25.4	3.5	0.4	37.1	2.4	7.1	3.8	0.1	13.5	3.4	18.6	6.8	1	29.8	7.6	6.2	5.6	0.2	19.6	
Cars +	1136	3746	531	61	5474	355	999	570	21	1945	498	2733	1006	152	4389	1131	933	809	30	2903	14711
% Cars +	96.9	98.3	99.6	98.4	98.1	99.4	93.4	99	100	96.1	98.2	97.9	98.9	100	98.2	99.6	99.6	96.7	83.3	98.5	98
Trucks	36	66	2	1	105	2	71	6	0	79	9	60	11	0	80	5	4	28	6	43	307
% Trucks	3.1	1.7	0.4	1.6	1.9	0.6	6.6	1	0	3.9	1.8	2.1	1.1	0	1.8	0.4	0.4	3.3	16.7	1.5	2

File Name : Blacksburg(Main and Patrick Henry) 2
Site Code :
Start Date : 11/28/2018
Page No : 3

	Main Street Southbound					Patrick Henry Drive Westbound					Main Street Northbound					Patrick Henry Drive Eastbound					
Start Time	Right	Thru	Left	Peds	App. Total	Right	Thru	Left	Peds	App. Total	Right	Thru	Left	Peds	App. Total	Right	Thru	Left	Peds	App. Total	Int. Total
Peak Hour Analysis From 06:00 AM to 11:45 AM - Peak 1 of 1																					
Peak Hour for Entire Intersection Begins at 08:30 AM																					
08:30 AM	26	128	10	0	164	2	20	10	1	33	3	25	7	6	41	21	9	10	1	41	279
08:45 AM	35	124	15	1	175	8	17	18	1	44	3	37	11	1	52	34	12	17	1	64	335
09:00 AM	30	90	12	0	132	8	21	13	0	42	3	46	18	1	68	10	17	11	0	38	280
09:15 AM	19	90	6	0	115	3	12	8	0	23	7	45	6	3	61	16	15	11	0	42	241
Total Volume	110	432	43	1	586	21	70	49	2	142	16	153	42	11	222	81	53	49	2	185	1135
% App. Total																					
PHF	.786	.844	.717	.250	.837	.656	.833	.681	.500	.807	.571	.832	.583	.458	.816	.596	.779	.721	.500	.723	.847

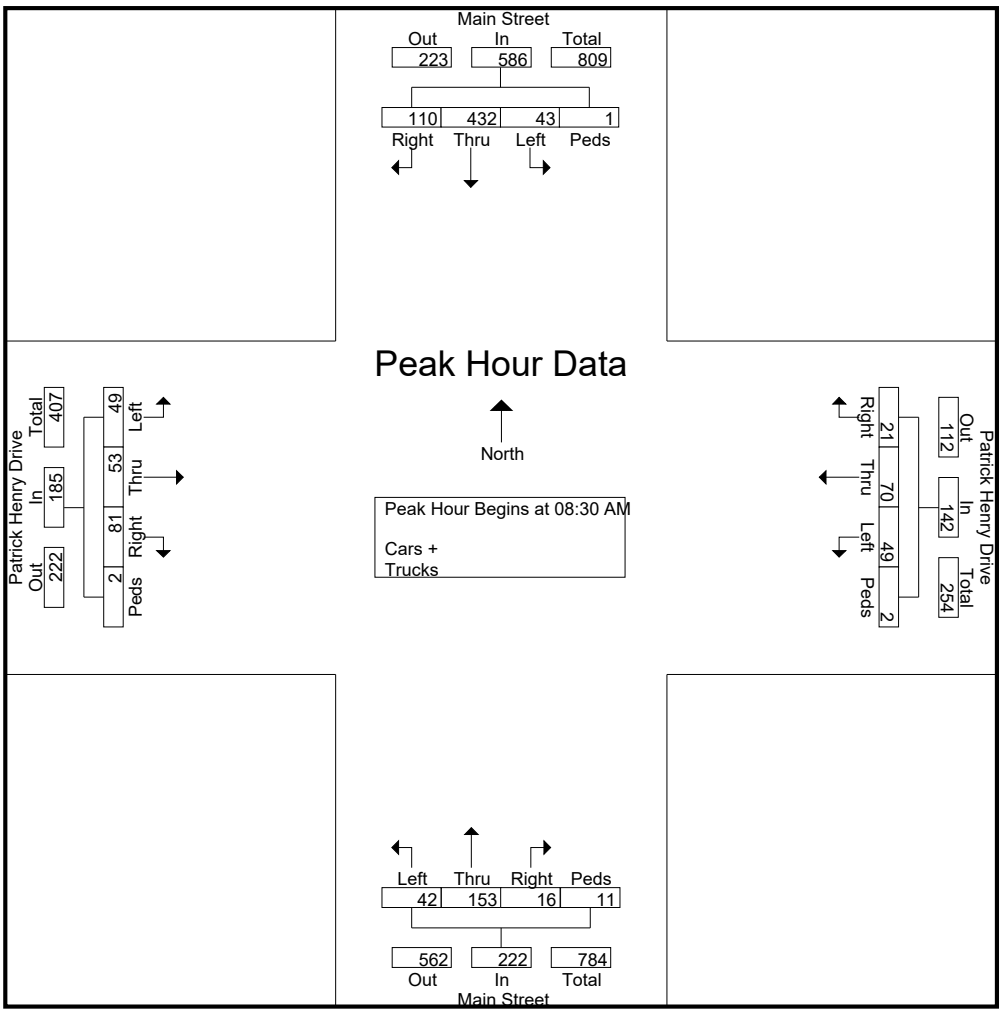

File Name : Blacksburg(Main and Patrick Henry) 2
Site Code :
Start Date : 11/28/2018
Page No : 4

	Main Street Southbound					Patrick Henry Drive Westbound					Main Street Northbound					Patrick Henry Drive Eastbound					
Start Time	Right	Thru	Left	Peds	App. Total	Right	Thru	Left	Peds	App. Total	Right	Thru	Left	Peds	App. Total	Right	Thru	Left	Peds	App. Total	Int. Total
Peak Hour Analysis From 12:00 PM to 06:45 PM - Peak 1 of 1																					
Peak Hour for Entire Intersection Begins at 05:00 PM																					
05:00 PM	40	93	14	1	148	13	43	20	0	76	15	102	32	9	158	44	35	19	0	98	480
05:15 PM	34	91	25	1	151	11	36	16	0	63	22	104	52	2	180	35	35	27	1	98	492
05:30 PM	37	81	17	3	138	12	38	14	1	65	15	110	41	3	169	29	33	29	0	91	463
05:45 PM	20	59	21	2	102	7	31	15	0	53	13	96	25	5	139	45	38	26	1	110	404
Total Volume	131	324	77	7	539	43	148	65	1	257	65	412	150	19	646	153	141	101	2	397	1839
% App. Total																					
PHF	.819	.871	.770	.583	.892	.827	.860	.813	.250	.845	.739	.936	.721	.528	.897	.850	.928	.871	.500	.902	.934

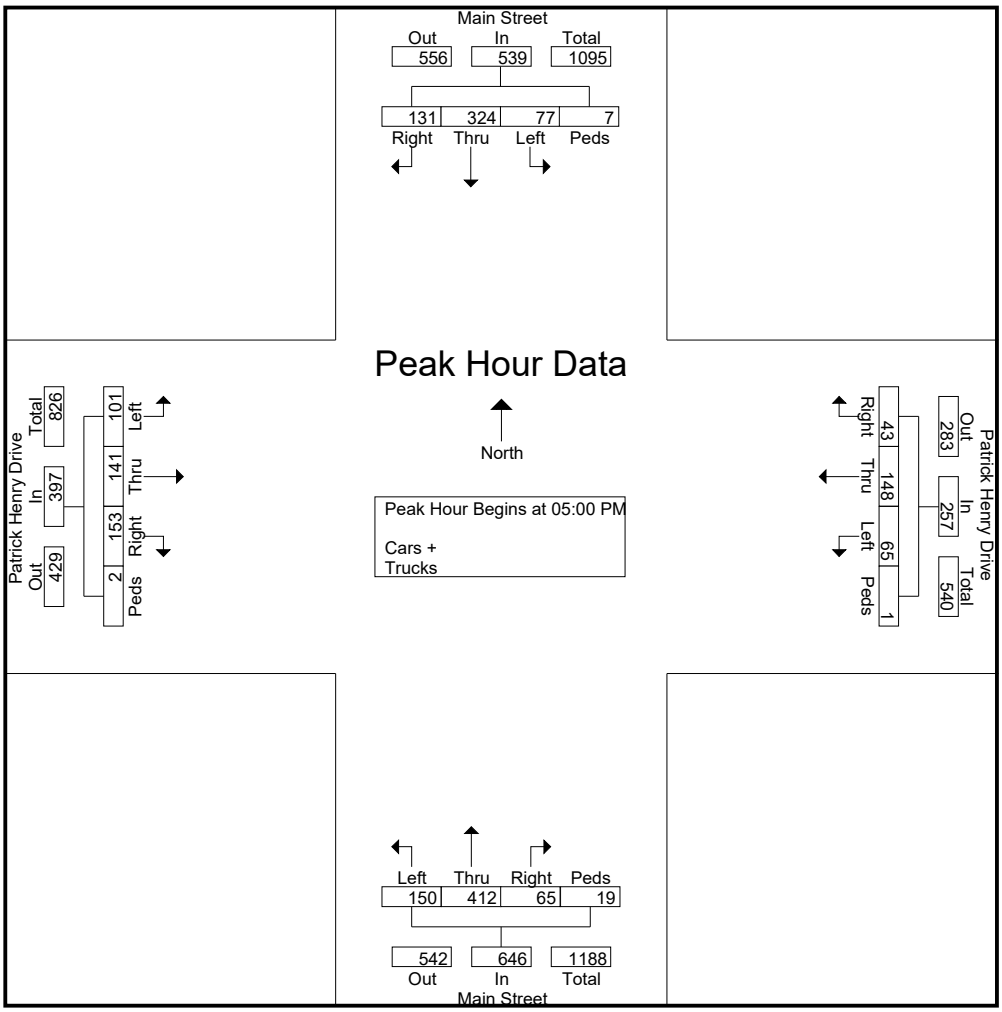

File Name : Blacksburg(Main and Montgomery) 2
Site Code :
Start Date : 11/27/2018
Page No : 1

Groups Printed- Cars + - Trucks

	Main Street Southbound					Gas Station Access Westbound					Main Street Northbound					Montgomery Street Eastbound					
Start Time	Right	Thru	Left	Peds	App. Total	Right	Thru	Left	Peds	App. Total	Right	Thru	Left	Peds	App. Total	Right	Thru	Left	Peds	App. Total	Int. Total
06:00 AM	0	21	0	0	21	0	0	0	0	0	0	33	0	0	33	1	0	0	0	1	55
06:15 AM	0	34	0	0	34	0	0	0	0	0	0	35	1	0	36	2	0	0	0	2	72
06:30 AM	0	56	0	0	56	0	0	0	0	0	0	32	0	0	32	0	0	1	0	1	89
06:45 AM	0	47	1	0	48	0	0	0	0	0	0	56	0	0	56	1	0	0	0	1	105
Total	0	158	1	0	159	0	0	0	0	0	0	156	1	0	157	4	0	1	0	5	321
07:00 AM	0	59	2	0	61	1	0	0	0	1	0	44	0	0	44	2	0	0	0	2	108
07:15 AM	0	105	0	0	105	0	0	1	0	1	1	34	0	0	35	3	0	0	2	5	146
07:30 AM	0	188	1	0	189	2	0	1	0	3	0	41	1	0	42	3	0	1	4	8	242
07:45 AM	0	189	1	0	190	0	0	0	0	0	1	49	1	0	51	2	0	0	6	8	249
Total	0	541	4	0	545	3	0	2	0	5	2	168	2	0	172	10	0	1	12	23	745
08:00 AM	0	111	0	0	111	0	0	0	0	0	2	69	2	0	73	1	0	0	4	5	189
08:15 AM	1	105	1	0	107	0	0	2	0	2	0	47	1	0	48	1	0	0	2	3	160
08:30 AM	1	130	1	0	132	0	0	1	0	1	3	51	3	0	57	3	0	0	3	6	196
08:45 AM	1	159	1	1	162	1	1	0	0	2	5	52	2	0	59	6	1	1	1	9	232
Total	3	505	3	1	512	1	1	3	0	5	10	219	8	0	237	11	1	1	10	23	777
09:00 AM	0	184	2	0	186	0	0	0	0	0	1	57	2	0	60	3	2	1	2	8	254
09:15 AM	0	153	1	0	154	1	0	2	0	3	3	96	0	0	99	4	0	1	3	8	264
09:30 AM	2	94	0	0	96	0	0	2	0	2	5	83	3	0	91	1	0	0	2	3	192
09:45 AM	1	96	1	0	98	0	0	2	0	2	3	62	0	0	65	4	0	1	3	8	173
Total	3	527	4	0	534	1	0	6	0	7	12	298	5	0	315	12	2	3	10	27	883
10:00 AM	3	84	0	0	87	0	1	0	0	1	2	64	0	0	66	3	0	0	0	3	157
10:15 AM	0	99	1	0	100	1	0	2	0	3	4	55	2	0	61	2	0	3	2	7	171
10:30 AM	3	123	0	0	126	0	0	2	0	2	5	70	1	0	76	1	0	0	2	3	207
10:45 AM	1	124	0	0	125	0	0	3	0	3	5	78	3	0	86	4	0	0	2	6	220
Total	7	430	1	0	438	1	1	7	0	9	16	267	6	0	289	10	0	3	6	19	755
11:00 AM	1	98	0	0	99	1	0	3	0	4	5	112	0	0	117	0	0	0	1	1	221
11:15 AM	1	99	0	0	100	1	0	1	0	2	4	79	1	0	84	0	0	0	1	1	187
11:30 AM	3	104	0	0	107	0	0	2	0	2	4	84	1	0	89	0	0	0	0	0	198
11:45 AM	5	118	0	0	123	0	0	8	0	8	4	83	6	0	93	3	0	2	0	5	229
Total	10	419	0	0	429	2	0	14	0	16	17	358	8	0	383	3	0	2	2	7	835
12:00 PM	5	119	3	0	127	1	0	4	0	5	7	99	5	0	111	1	1	1	1	4	247
12:15 PM	2	120	2	0	124	0	0	4	0	4	0	86	3	0	89	1	0	1	1	3	220
12:30 PM	2	87	0	0	89	0	0	2	0	2	1	135	5	0	141	4	0	1	0	5	237
12:45 PM	4	121	0	0	125	0	0	2	0	2	2	125	4	0	131	6	0	3	0	9	267
Total	13	447	5	0	465	1	0	12	0	13	10	445	17	0	472	12	1	6	2	21	971
01:00 PM	1	105	0	0	106	0	1	1	0	2	3	91	2	0	96	4	0	1	0	5	209
01:15 PM	2	101	1	0	104	0	0	1	0	1	3	85	4	0	92	4	0	1	3	8	205
01:30 PM	5	148	0	0	153	0	0	5	0	5	5	93	5	0	103	7	0	3	5	15	276
01:45 PM	1	128	0	0	129	0	0	1	1	2	2	105	2	1	110	5	0	2	4	11	252
Total	9	482	1	0	492	0	1	8	1	10	13	374	13	1	401	20	0	7	12	39	942
02:00 PM	0	66	0	0	66	0	0	4	3	7	5	114	5	0	124	2	1	1	1	5	202
02:15 PM	0	84	0	0	84	0	0	4	0	4	0	95	3	0	98	2	1	1	0	4	190
02:30 PM	1	79	0	0	80	0	0	4	0	4	2	89	1	1	93	4	0	1	1	6	183
02:45 PM	1	75	0	0	76	0	0	5	2	7	2	98	5	0	105	1	0	0	0	1	189
Total	2	304	0	0	306	0	0	17	5	22	9	396	14	1	420	9	2	3	2	16	764
03:00 PM	2	121	1	0	124	0	0	2	0	2	4	110	5	0	119	5	0	1	0	6	251
03:15 PM	3	105	0	0	108	0	0	0	1	1	3	127	4	0	134	5	0	1	4	10	253
03:30 PM	1	131	1	0	133	0	0	2	0	2	2	150	5	0	157	1	0	1	3	5	297
03:45 PM	0	106	0	0	106	0	0	3	0	3	2	124	4	0	130	5	0	1	4	10	249
Total	6	463	2	0	471	0	0	7	1	8	11	511	18	0	540	16	0	4	11	31	1050

File Name : Blacksburg(Main and Montgomery) 2
Site Code :
Start Date : 11/27/2018
Page No : 2

Groups Printed- Cars + - Trucks

	Main Street Southbound					Gas Station Access Westbound					Main Street Northbound					Montgomery Street Eastbound					
Start Time	Right	Thru	Left	Peds	App. Total	Right	Thru	Left	Peds	App. Total	Right	Thru	Left	Peds	App. Total	Right	Thru	Left	Peds	App. Total	Int. Total
04:00 PM	3	113	0	0	116	0	0	2	0	2	4	119	5	1	129	1	1	1	1	4	251
04:15 PM	3	116	0	0	119	0	0	2	0	2	2	114	2	0	118	2	0	1	1	4	243
04:30 PM	1	164	1	0	166	0	0	2	2	4	1	113	8	0	122	1	0	3	4	8	300
04:45 PM	9	180	2	0	191	0	2	3	1	6	1	141	4	1	147	2	1	3	2	8	352
Total	16	573	3	0	592	0	2	9	3	14	8	487	19	2	516	6	2	8	8	24	1146
05:00 PM	6	129	1	0	136	0	0	1	0	1	2	166	8	0	176	6	0	1	2	9	322
05:15 PM	3	149	1	0	153	0	0	1	1	2	0	176	8	0	184	3	0	3	1	7	346
05:30 PM	4	128	2	0	134	0	0	1	0	1	1	137	10	0	148	7	1	1	2	11	294
05:45 PM	4	154	2	0	160	0	0	2	0	2	0	149	5	0	154	3	1	2	0	6	322
Total	17	560	6	0	583	0	0	5	1	6	3	628	31	0	662	19	2	7	5	33	1284
06:00 PM	7	134	1	0	142	0	0	1	0	1	4	122	2	2	130	7	0	3	1	11	284
06:15 PM	9	143	1	0	153	1	0	2	0	3	2	144	6	0	152	5	1	4	2	12	320
06:30 PM	7	113	0	0	120	1	0	1	0	2	4	141	9	0	154	5	0	2	2	9	285
06:45 PM	5	115	0	0	120	0	0	0	0	0	0	140	8	0	148	11	0	2	2	15	283
Total	28	505	2	0	535	2	0	4	0	6	10	547	25	2	584	28	1	11	7	47	1172
Grand Total	114	5914	32	1	6061	11	5	94	11	121	121	4854	167	6	5148	160	11	57	87	315	11645
Apprch %	1.9	97.6	0.5	0		9.1	4.1	77.7	9.1		2.4	94.3	3.2	0.1		50.8	3.5	18.1	27.6		
Total %	1	50.8	0.3	0	52	0.1	0	0.8	0.1	1	1	41.7	1.4	0.1	44.2	1.4	0.1	0.5	0.7	2.7	
Cars +	112	5901	31	1	6045	11	5	93	11	120	119	4820	165	6	5110	157	11	55	74	297	11572
% Cars +	98.2	99.8	96.9	100	99.7	100	100	98.9	100	99.2	98.3	99.3	98.8	100	99.3	98.1	100	96.5	85.1	94.3	99.4
Trucks	2	13	1	0	16	0	0	1	0	1	2	34	2	0	38	3	0	2	13	18	73
% Trucks	1.8	0.2	3.1	0	0.3	0	0	1.1	0	0.8	1.7	0.7	1.2	0	0.7	1.9	0	3.5	14.9	5.7	0.6

File Name : Blacksburg(Main and Montgomery) 2
Site Code :
Start Date : 11/27/2018
Page No : 3

	Main Street Southbound					Gas Station Access Westbound					Main Street Northbound					Montgomery Street Eastbound					
Start Time	Right	Thru	Left	Peds	App. Total	Right	Thru	Left	Peds	App. Total	Right	Thru	Left	Peds	App. Total	Right	Thru	Left	Peds	App. Total	Int. Total
Peak Hour Analysis From 07:00 AM to 10:00 AM - Peak 1 of 1																					
Peak Hour for Entire Intersection Begins at 08:30 AM																					
08:30 AM	1	130	1	0	132	0	0	1	0	1	3	51	3	0	57	3	0	0	3	6	196
08:45 AM	1	159	1	1	162	1	1	0	0	2	5	52	2	0	59	6	1	1	1	9	232
09:00 AM	0	184	2	0	186	0	0	0	0	0	1	57	2	0	60	3	2	1	2	8	254
09:15 AM	0	153	1	0	154	1	0	2	0	3	3	96	0	0	99	4	0	1	3	8	264
Total Volume	2	626	5	1	634	2	1	3	0	6	12	256	7	0	275	16	3	3	9	31	946
% App. Total	0.3	98.7	0.8	0.2		33.3	16.7	50	0		4.4	93.1	2.5	0		51.6	9.7	9.7	29		
PHF	.500	.851	.625	.250	.852	.500	.250	.375	.000	.500	.600	.667	.583	.000	.694	.667	.375	.750	.750	.861	.896

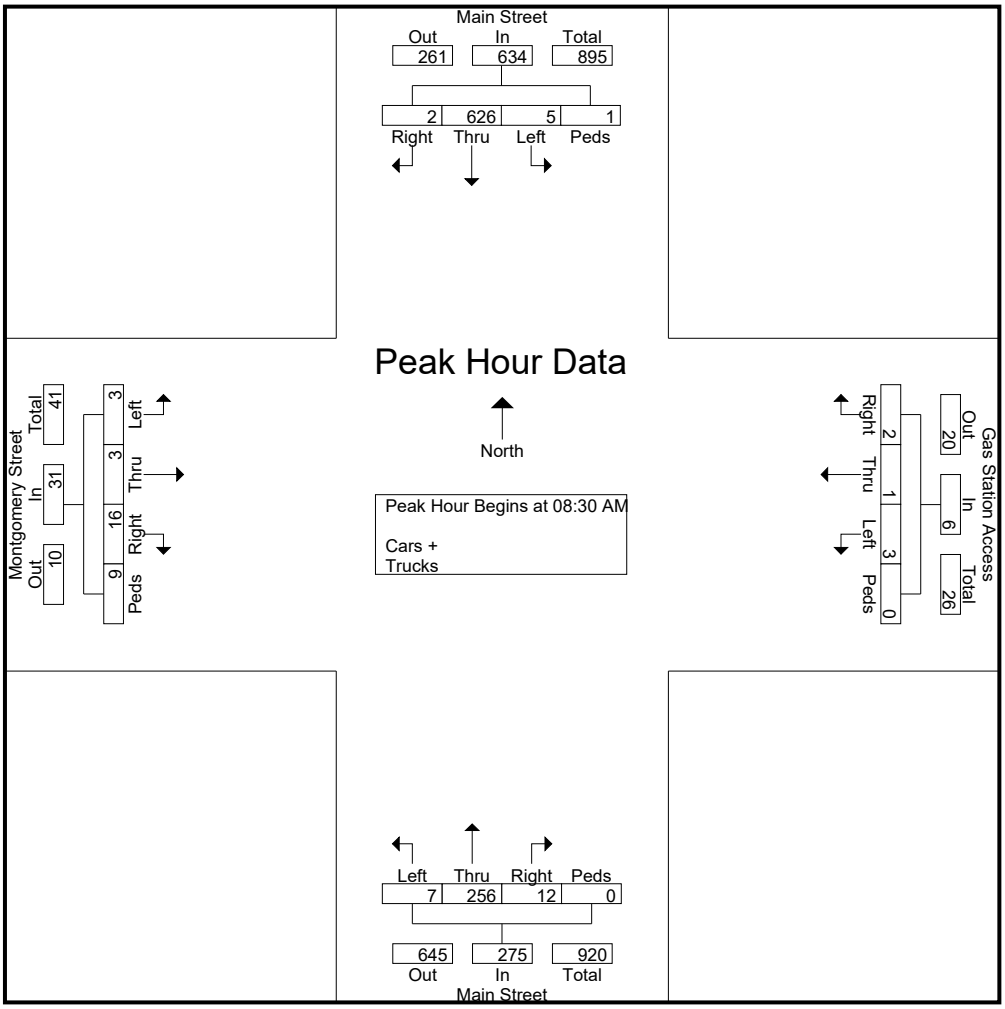

File Name : Blacksburg(Main and Montgomery) 2
Site Code :
Start Date : 11/27/2018
Page No : 4

	Main Street Southbound					Gas Station Access Westbound					Main Street Northbound					Montgomery Street Eastbound					
Start Time	Right	Thru	Left	Peds	App. Total	Right	Thru	Left	Peds	App. Total	Right	Thru	Left	Peds	App. Total	Right	Thru	Left	Peds	App. Total	Int. Total
Peak Hour Analysis From 12:00 PM to 06:45 PM - Peak 1 of 1																					
Peak Hour for Entire Intersection Begins at 04:30 PM																					
04:30 PM	1	164	1	0	166	0	0	2	2	4	1	113	8	0	122	1	0	3	4	8	300
04:45 PM	9	180	2	0	191	0	2	3	1	6	1	141	4	1	147	2	1	3	2	8	352
05:00 PM	6	129	1	0	136	0	0	1	0	1	2	166	8	0	176	6	0	1	2	9	322
05:15 PM	3	149	1	0	153	0	0	1	1	2	0	176	8	0	184	3	0	3	1	7	346
Total Volume	19	622	5	0	646	0	2	7	4	13	4	596	28	1	629	12	1	10	9	32	1320
% App. Total	2.9	96.3	0.8	0		0	15.4	53.8	30.8		0.6	94.8	4.5	0.2		37.5	3.1	31.2	28.1		
PHF	.528	.864	.625	.000	.846	.000	.250	.583	.500	.542	.500	.847	.875	.250	.855	.500	.250	.833	.563	.889	.938

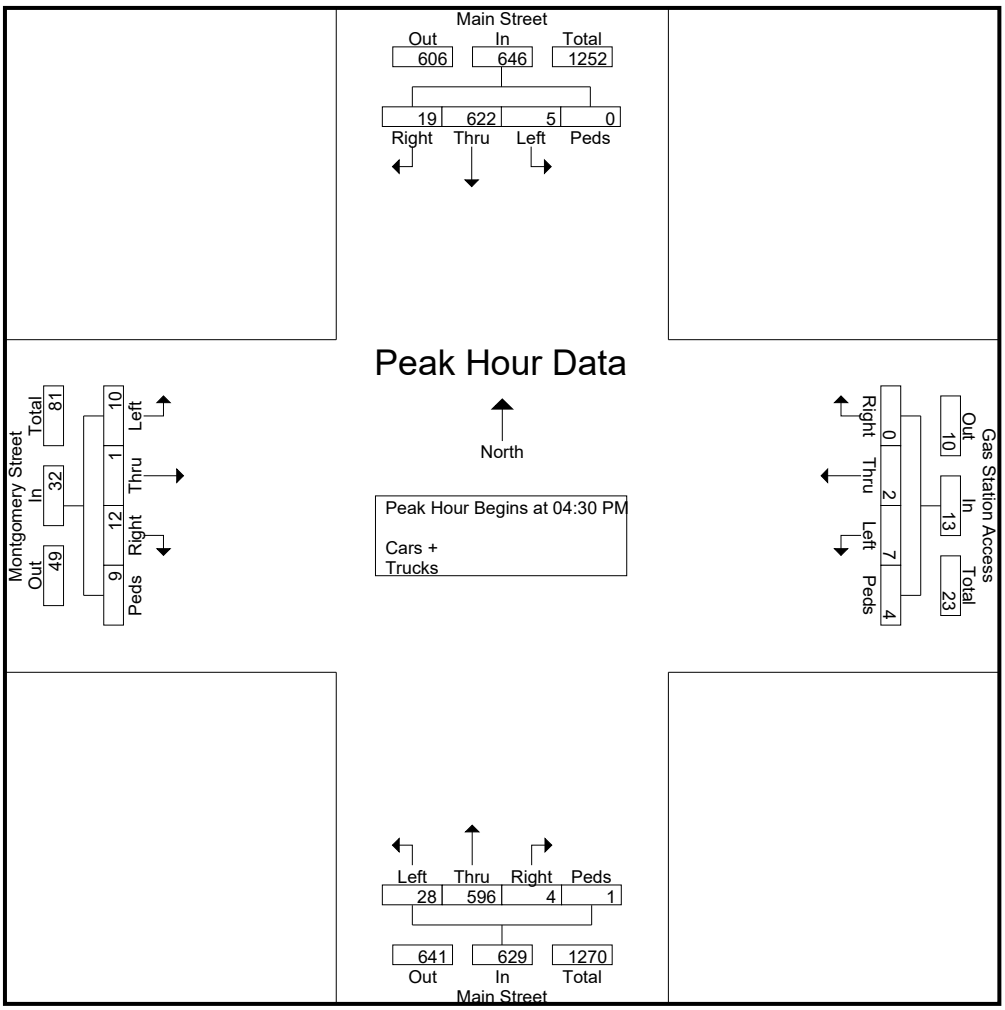

File Name : Blacksburg(Main and YMCA Access) 2
Site Code :
Start Date : 11/27/2018
Page No : 1

Groups Printed- Cars + - Trucks

	Main Street Southbound				YMCA Access Westbound				Main Street Northbound				
Start Time	Thru	Left	Peds	App. Total	Right	Left	Peds	App. Total	Right	Thru	Peds	App. Total	Int. Total
06:00 AM	24	0	0	24	0	0	0	0	0	34	0	34	58
06:15 AM	30	0	0	30	0	0	0	0	0	33	0	33	63
06:30 AM	64	0	0	64	0	0	0	0	0	35	0	35	99
06:45 AM	44	0	0	44	0	0	0	0	0	59	0	59	103
Total	162	0	0	162	0	0	0	0	0	161	0	161	323
07:00 AM	63	0	0	63	0	0	0	0	0	44	0	44	107
07:15 AM	105	0	0	105	0	1	0	1	0	38	0	38	144
07:30 AM	215	0	0	215	0	0	0	0	0	40	0	40	255
07:45 AM	202	0	0	202	0	1	0	1	1	43	0	44	247
Total	585	0	0	585	0	2	0	2	1	165	0	166	753
08:00 AM	115	0	0	115	0	0	0	0	0	64	0	64	179
08:15 AM	109	0	0	109	0	0	0	0	0	44	0	44	153
08:30 AM	137	0	0	137	0	0	0	0	0	49	0	49	186
08:45 AM	165	1	0	166	0	1	0	1	0	50	0	50	217
Total	526	1	0	527	0	1	0	1	0	207	0	207	735
09:00 AM	188	2	0	190	0	1	0	1	0	63	0	63	254
09:15 AM	159	1	0	160	0	0	0	0	4	97	0	101	261
09:30 AM	90	1	0	91	1	3	0	4	3	72	0	75	170
09:45 AM	92	4	0	96	0	4	0	4	5	58	0	63	163
Total	529	8	0	537	1	8	0	9	12	290	0	302	848
10:00 AM	83	2	0	85	0	1	0	1	1	53	0	54	140
10:15 AM	104	0	0	104	3	0	0	3	2	63	0	65	172
10:30 AM	140	0	0	140	1	1	0	2	2	73	0	75	217
10:45 AM	132	2	0	134	6	0	0	6	1	84	0	85	225
Total	459	4	0	463	10	2	0	12	6	273	0	279	754
11:00 AM	88	4	0	92	1	1	0	2	5	97	0	102	196
11:15 AM	96	1	0	97	8	2	0	10	1	71	0	72	179
11:30 AM	106	2	0	108	5	3	0	8	2	84	0	86	202
11:45 AM	119	1	0	120	3	3	0	6	0	82	0	82	208
Total	409	8	0	417	17	9	0	26	8	334	0	342	785
12:00 PM	157	0	0	157	1	2	0	3	4	98	0	102	262
12:15 PM	130	3	0	133	3	4	0	7	3	115	0	118	258
12:30 PM	84	1	0	85	5	2	0	7	2	115	0	117	209
12:45 PM	116	1	0	117	3	3	0	6	4	117	0	121	244
Total	487	5	0	492	12	11	0	23	13	445	0	458	973
01:00 PM	103	2	0	105	3	4	0	7	1	95	0	96	208
01:15 PM	97	1	0	98	3	2	0	5	2	85	0	87	190
01:30 PM	150	0	0	150	2	3	0	5	1	96	0	97	252
01:45 PM	125	3	0	128	5	1	0	6	2	106	0	108	242
Total	475	6	0	481	13	10	0	23	6	382	0	388	892
02:00 PM	64	3	0	67	3	1	0	4	4	107	0	111	182
02:15 PM	80	1	0	81	4	5	0	9	3	91	0	94	184
02:30 PM	80	3	0	83	5	3	0	8	1	92	0	93	184
02:45 PM	85	0	0	85	4	1	0	5	5	96	0	101	191
Total	309	7	0	316	16	10	0	26	13	386	0	399	741
03:00 PM	119	3	0	122	2	6	0	8	0	107	0	107	237
03:15 PM	102	2	0	104	2	3	0	5	0	128	0	128	237
03:30 PM	132	2	0	134	4	0	0	4	0	138	0	138	276
03:45 PM	103	2	0	105	3	3	0	6	2	122	0	124	235
Total	456	9	0	465	11	12	0	23	2	495	0	497	985

File Name : Blacksburg(Main and YMCA Access) 2
Site Code :
Start Date : 11/27/2018
Page No : 2

Groups Printed- Cars + - Trucks

	Main Street Southbound				YMCA Access Westbound				Main Street Northbound				
Start Time	Thru	Left	Peds	App. Total	Right	Left	Peds	App. Total	Right	Thru	Peds	App. Total	Int. Total
04:00 PM	118	0	0	118	0	1	0	1	1	112	0	113	232
04:15 PM	129	0	0	129	1	2	0	3	1	108	0	109	241
04:30 PM	160	1	0	161	3	1	0	4	1	115	0	116	281
04:45 PM	193	3	0	196	3	1	0	4	0	140	0	140	340
Total	600	4	0	604	7	5	0	12	3	475	0	478	1094
05:00 PM	125	0	0	125	1	1	0	2	3	166	0	169	296
05:15 PM	159	0	0	159	1	0	0	1	1	159	0	160	320
05:30 PM	140	1	0	141	6	0	0	6	1	136	0	137	284
05:45 PM	160	0	0	160	0	0	0	0	0	157	0	157	317
Total	584	1	0	585	8	1	0	9	5	618	0	623	1217
06:00 PM	151	2	0	153	1	0	0	1	1	134	0	135	289
06:15 PM	149	1	0	150	2	1	0	3	1	133	0	134	287
06:30 PM	125	0	0	125	2	0	0	2	2	149	0	151	278
06:45 PM	122	0	0	122	2	1	0	3	0	133	0	133	258
Total	547	3	0	550	7	2	0	9	4	549	0	553	1112
Grand Total	6128	56	0	6184	102	73	0	175	73	4780	0	4853	11212
Apprch %	99.1	0.9	0		58.3	41.7	0		1.5	98.5	0		
Total %	54.7	0.5	0	55.2	0.9	0.7	0	1.6	0.7	42.6	0	43.3	
Cars +	6034	56	0	6090	102	73	0	175	72	4642	0	4714	10979
% Cars +	98.5	100	0	98.5	100	100	0	100	98.6	97.1	0	97.1	97.9
Trucks	94	0	0	94	0	0	0	0	1	138	0	139	233
% Trucks	1.5	0	0	1.5	0	0	0	0	1.4	2.9	0	2.9	2.1

File Name : Blacksburg(Main and YMCA Access) 2
Site Code :
Start Date : 11/27/2018
Page No : 3

	Main Street Southbound				YMCA Access Westbound				Main Street Northbound				
Start Time	Thru	Left	Peds	App. Total	Right	Left	Peds	App. Total	Right	Thru	Peds	App. Total	Int. Total
Peak Hour Analysis From 06:00 AM to 11:45 AM - Peak 1 of 1													
Peak Hour for Entire Intersection Begins at 08:30 AM													
08:30 AM	137	0	0	137	0	0	0	0	0	49	0	49	186
08:45 AM	165	1	0	166	0	1	0	1	0	50	0	50	217
09:00 AM	188	2	0	190	0	1	0	1	0	63	0	63	254
09:15 AM	159	1	0	160	0	0	0	0	4	97	0	101	261
Total Volume	649	4	0	653	0	2	0	2	4	259	0	263	918
% App. Total	99.4	0.6	0		0	100	0		1.5	98.5	0		
PHF	.863	.500	.000	.859	.000	.500	.000	.500	.250	.668	.000	.651	.879

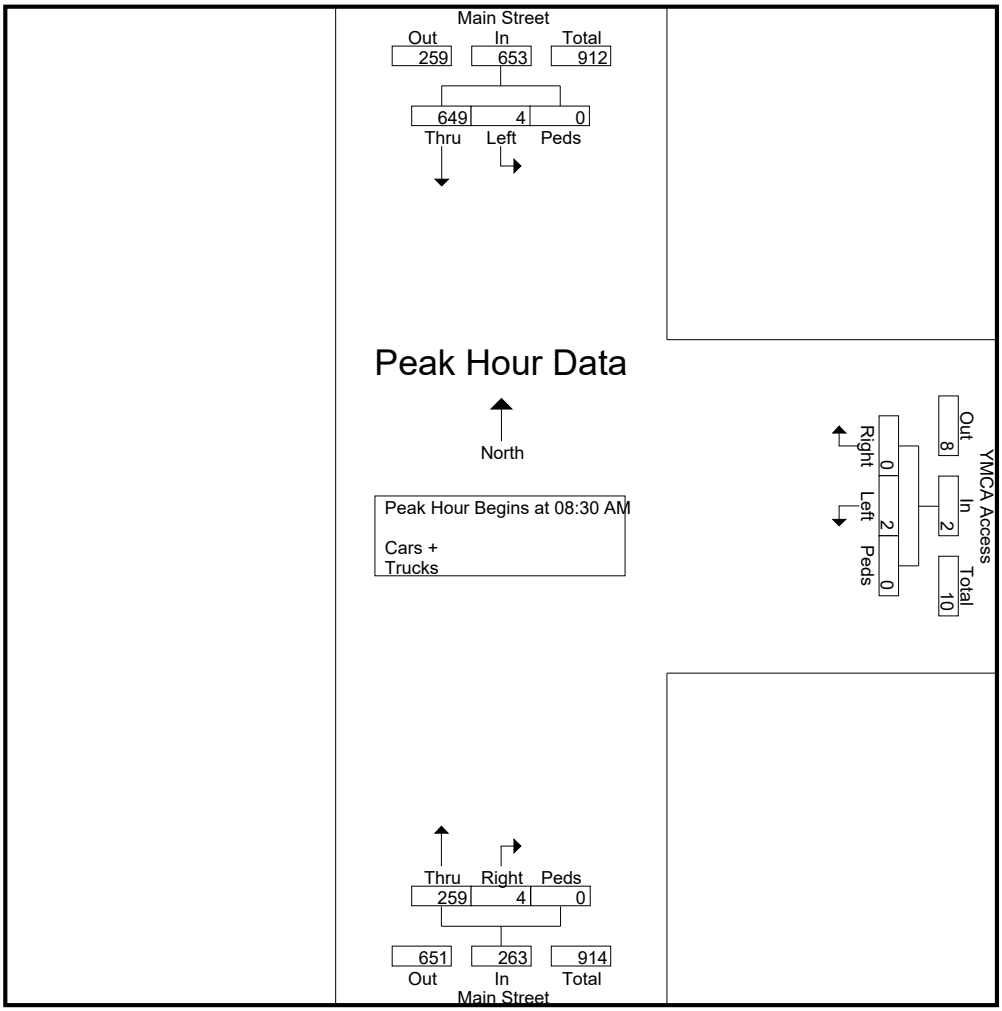

File Name : Blacksburg(Main and YMCA Access) 2
Site Code :
Start Date : 11/27/2018
Page No : 4

	Main Street Southbound				YMCA Access Westbound				Main Street Northbound				
Start Time	Thru	Left	Peds	App. Total	Right	Left	Peds	App. Total	Right	Thru	Peds	App. Total	Int. Total
Peak Hour Analysis From 12:00 PM to 06:45 PM - Peak 1 of 1													
Peak Hour for Entire Intersection Begins at 04:45 PM													
04:45 PM	193	3	0	196	3	1	0	4	0	140	0	140	340
05:00 PM	125	0	0	125	1	1	0	2	3	166	0	169	296
05:15 PM	159	0	0	159	1	0	0	1	1	159	0	160	320
05:30 PM	140	1	0	141	6	0	0	6	1	136	0	137	284
Total Volume	617	4	0	621	11	2	0	13	5	601	0	606	1240
% App. Total	99.4	0.6	0		84.6	15.4	0		0.8	99.2	0		
PHF	.799	.333	.000	.792	.458	.500	.000	.542	.417	.905	.000	.896	.912

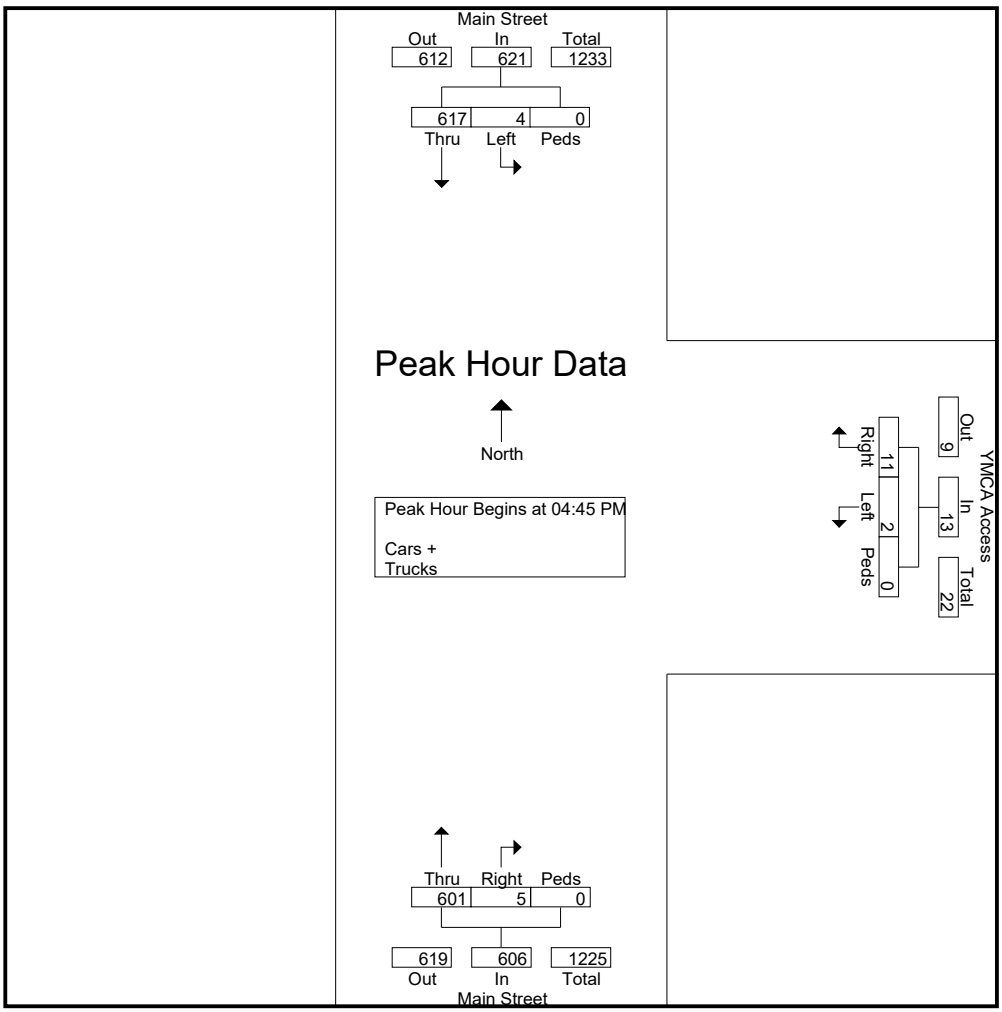

File Name : Blacksburg(Main and Lucas) 2
Site Code :
Start Date : 11/27/2018
Page No : 1

Groups Printed- Cars + - Trucks

	Main Street Southbound					Lucas Drive Westbound					Main Street Northbound					Eastbound					
Start Time	Right	Thru	Left	Peds	App. Total	Right	Thru	Left	Peds	App. Total	Right	Thru	Left	Peds	App. Total	Right	Thru	Left	Peds	App. Total	Int. Total
06:00 AM	0	22	0	0	22	1	0	0	0	1	0	33	0	0	33	1	0	0	0	1	57
06:15 AM	0	32	0	0	32	1	0	0	1	2	0	35	0	0	35	0	0	0	0	0	69
06:30 AM	0	62	1	0	63	0	0	1	1	2	0	34	0	0	34	0	0	0	0	0	99
06:45 AM	0	41	0	0	41	1	0	2	0	3	0	56	0	1	57	0	0	0	1	1	102
Total	0	157	1	0	158	3	0	3	2	8	0	158	0	1	159	1	0	0	1	2	327
07:00 AM	0	63	0	0	63	0	0	1	0	1	0	44	0	0	44	0	0	0	1	1	109
07:15 AM	0	100	1	0	101	1	0	3	0	4	2	33	0	0	35	0	0	0	1	1	141
07:30 AM	0	210	1	0	211	0	0	3	2	5	0	41	0	2	43	0	0	0	5	5	264
07:45 AM	0	206	1	0	207	1	0	2	0	3	2	46	0	0	48	0	0	0	2	2	260
Total	0	579	3	0	582	2	0	9	2	13	4	164	0	2	170	0	0	0	9	9	774
08:00 AM	0	113	2	0	115	1	0	0	0	1	2	69	0	0	71	0	0	0	4	4	191
08:15 AM	0	108	0	0	108	0	0	2	0	2	4	42	0	0	46	0	0	0	2	2	158
08:30 AM	0	138	3	0	141	1	0	2	0	3	3	44	0	1	48	0	0	0	2	2	194
08:45 AM	2	168	3	0	173	1	0	1	3	5	2	47	2	0	51	2	0	0	1	3	232
Total	2	527	8	0	537	3	0	5	3	11	11	202	2	1	216	2	0	0	9	11	775
09:00 AM	2	189	0	0	191	1	0	3	1	5	3	58	1	0	62	1	0	1	3	5	263
09:15 AM	1	154	3	0	158	5	0	4	1	10	5	87	3	1	96	0	0	0	3	3	267
09:30 AM	1	89	3	0	93	2	0	3	2	7	2	74	1	0	77	1	0	1	3	5	182
09:45 AM	0	92	3	2	97	3	0	4	2	9	3	54	1	0	58	1	0	0	1	2	166
Total	4	524	9	2	539	11	0	14	6	31	13	273	6	1	293	3	0	2	10	15	878
10:00 AM	3	82	3	0	88	3	0	1	0	4	4	56	0	0	60	2	0	0	0	2	154
10:15 AM	1	96	1	1	99	1	0	3	0	4	3	60	0	0	63	3	0	0	1	4	170
10:30 AM	1	132	2	0	135	1	0	2	1	4	3	65	1	0	69	3	0	1	3	7	215
10:45 AM	0	122	0	0	122	1	0	5	0	6	4	84	0	0	88	1	0	1	2	4	220
Total	5	432	6	1	444	6	0	11	1	18	14	265	1	0	280	9	0	2	6	17	759
11:00 AM	3	85	2	0	90	0	0	3	0	3	4	103	1	0	108	1	0	0	2	3	204
11:15 AM	0	97	1	0	98	0	0	1	0	1	2	82	0	0	84	2	0	0	1	3	186
11:30 AM	1	111	3	1	116	2	0	1	1	4	3	88	1	0	92	1	0	0	0	1	213
11:45 AM	0	119	2	0	121	3	0	2	2	7	1	86	0	0	87	0	0	0	0	0	215
Total	4	412	8	1	425	5	0	7	3	15	10	359	2	0	371	4	0	0	3	7	818
12:00 PM	1	150	1	1	153	1	0	1	0	2	4	95	1	0	100	1	0	1	0	2	257
12:15 PM	3	134	3	0	140	2	0	2	0	4	2	113	1	0	116	2	0	1	6	9	269
12:30 PM	0	84	2	1	87	0	0	1	1	2	3	137	2	0	142	1	0	1	0	2	233
12:45 PM	0	113	4	0	117	1	0	2	2	5	2	126	0	0	128	0	0	1	0	1	251
Total	4	481	10	2	497	4	0	6	3	13	11	471	4	0	486	4	0	4	6	14	1010
01:00 PM	0	105	4	0	109	6	0	5	0	11	2	94	2	0	98	0	0	1	0	1	219
01:15 PM	0	97	0	0	97	4	0	1	0	5	2	86	0	0	88	0	0	1	5	6	196
01:30 PM	2	143	3	0	148	1	0	6	0	7	4	95	0	0	99	2	0	0	6	8	262
01:45 PM	0	122	4	0	126	3	0	6	2	11	5	107	0	0	112	0	0	0	3	3	252
Total	2	467	11	0	480	14	0	18	2	34	13	382	2	0	397	2	0	2	14	18	929
02:00 PM	0	64	0	0	64	1	0	1	1	3	6	110	1	0	117	3	0	0	1	4	188
02:15 PM	0	76	2	0	78	0	0	4	0	4	6	92	0	0	98	0	1	0	0	1	181
02:30 PM	3	76	2	0	81	2	0	4	0	6	3	90	1	0	94	1	0	1	0	2	183
02:45 PM	0	84	1	0	85	0	0	3	2	5	2	98	0	0	100	0	0	0	0	0	190
Total	3	300	5	0	308	3	0	12	3	18	17	390	2	0	409	4	1	1	1	7	742
03:00 PM	2	115	2	0	119	1	0	2	0	3	3	103	2	0	108	2	0	1	1	4	234
03:15 PM	0	91	1	0	92	1	0	6	0	7	3	131	0	0	134	0	0	2	2	4	237
03:30 PM	0	133	4	0	137	2	0	0	1	3	4	146	1	0	151	1	0	0	2	3	294
03:45 PM	1	101	6	0	108	3	0	1	0	4	4	124	2	0	130	0	0	1	4	5	247
Total	3	440	13	0	456	7	0	9	1	17	14	504	5	0	523	3	0	4	9	16	1012

File Name : Blacksburg(Main and Lucas) 2
Site Code :
Start Date : 11/27/2018
Page No : 2

Groups Printed- Cars + - Trucks

	Main Street Southbound					Lucas Drive Westbound					Main Street Northbound					Eastbound					
Start Time	Right	Thru	Left	Peds	App. Total	Right	Thru	Left	Peds	App. Total	Right	Thru	Left	Peds	App. Total	Right	Thru	Left	Peds	App. Total	Int. Total
04:00 PM	0	112	3	0	115	4	0	2	1	7	4	115	2	1	122	3	0	0	1	4	248
04:15 PM	4	121	0	0	125	1	0	4	0	5	6	111	2	0	119	0	0	0	1	1	250
04:30 PM	1	160	2	0	163	5	0	3	1	9	3	115	2	0	120	1	0	2	4	7	299
04:45 PM	1	184	0	0	185	3	0	4	1	8	6	143	0	0	149	1	0	0	2	3	345
Total	6	577	5	0	588	13	0	13	3	29	19	484	6	1	510	5	0	2	8	15	1142
05:00 PM	1	120	3	0	124	1	0	4	2	7	7	162	0	1	170	3	0	0	3	6	307
05:15 PM	2	151	3	0	156	4	0	0	3	7	6	167	2	0	175	2	0	0	2	4	342
05:30 PM	4	128	2	0	134	2	0	3	1	6	9	135	1	0	145	6	0	4	3	13	298
05:45 PM	0	157	2	0	159	3	0	4	1	8	9	144	0	0	153	1	0	1	0	2	322
Total	7	556	10	0	573	10	0	11	7	28	31	608	3	1	643	12	0	5	8	25	1269
06:00 PM	1	144	3	0	148	2	0	2	0	4	4	123	1	0	128	0	0	0	1	1	281
06:15 PM	1	158	2	0	161	3	0	1	2	6	2	146	1	0	149	0	0	1	1	2	318
06:30 PM	0	122	1	0	123	2	0	3	2	7	1	158	0	0	159	0	0	1	1	2	291
06:45 PM	1	112	1	0	114	1	0	3	1	5	5	128	3	0	136	2	0	0	2	4	259
Total	3	536	7	0	546	8	0	9	5	22	12	555	5	0	572	2	0	2	5	9	1149
Grand Total	43	5988	96	6	6133	89	0	127	41	257	169	4815	38	7	5029	51	1	24	89	165	11584
Apprch %	0.7	97.6	1.6	0.1		34.6	0	49.4	16		3.4	95.7	0.8	0.1		30.9	0.6	14.5	53.9		
Total %	0.4	51.7	0.8	0.1	52.9	0.8	0	1.1	0.4	2.2	1.5	41.6	0.3	0.1	43.4	0.4	0	0.2	0.8	1.4	
Cars +	41	5918	92	5	6056	88	0	127	35	250	102	4729	38	5	4874	49	1	24	66	140	11320
% Cars +	95.3	98.8	95.8	83.3	98.7	98.9	0	100	85.4	97.3	60.4	98.2	100	71.4	96.9	96.1	100	100	74.2	84.8	97.7
Trucks	2	70	4	1	77	1	0	0	6	7	67	86	0	2	155	2	0	0	23	25	264
% Trucks	4.7	1.2	4.2	16.7	1.3	1.1	0	0	14.6	2.7	39.6	1.8	0	28.6	3.1	3.9	0	0	25.8	15.2	2.3

File Name : Blacksburg(Main and Lucas) 2
Site Code :
Start Date : 11/27/2018
Page No : 3

	Main Street Southbound					Lucas Drive Westbound					Main Street Northbound					Eastbound					
Start Time	Right	Thru	Left	Peds	App. Total	Right	Thru	Left	Peds	App. Total	Right	Thru	Left	Peds	App. Total	Right	Thru	Left	Peds	App. Total	Int. Total
Peak Hour Analysis From 06:00 AM to 11:45 AM - Peak 1 of 1																					
Peak Hour for Entire Intersection Begins at 08:30 AM																					
08:30 AM	0	138	3	0	141	1	0	2	0	3	3	44	0	1	48	0	0	0	2	2	194
08:45 AM	2	168	3	0	173	1	0	1	3	5	2	47	2	0	51	2	0	0	1	3	232
09:00 AM	2	189	0	0	191	1	0	3	1	5	3	58	1	0	62	1	0	1	3	5	263
09:15 AM	1	154	3	0	158	5	0	4	1	10	5	87	3	1	96	0	0	0	3	3	267
Total Volume	5	649	9	0	663	8	0	10	5	23	13	236	6	2	257	3	0	1	9	13	956
% App. Total																					
PHF	.625	.858	.750	.000	.868	.400	.000	.625	.417	.575	.650	.678	.500	.500	.669	.375	.000	.250	.750	.650	.895

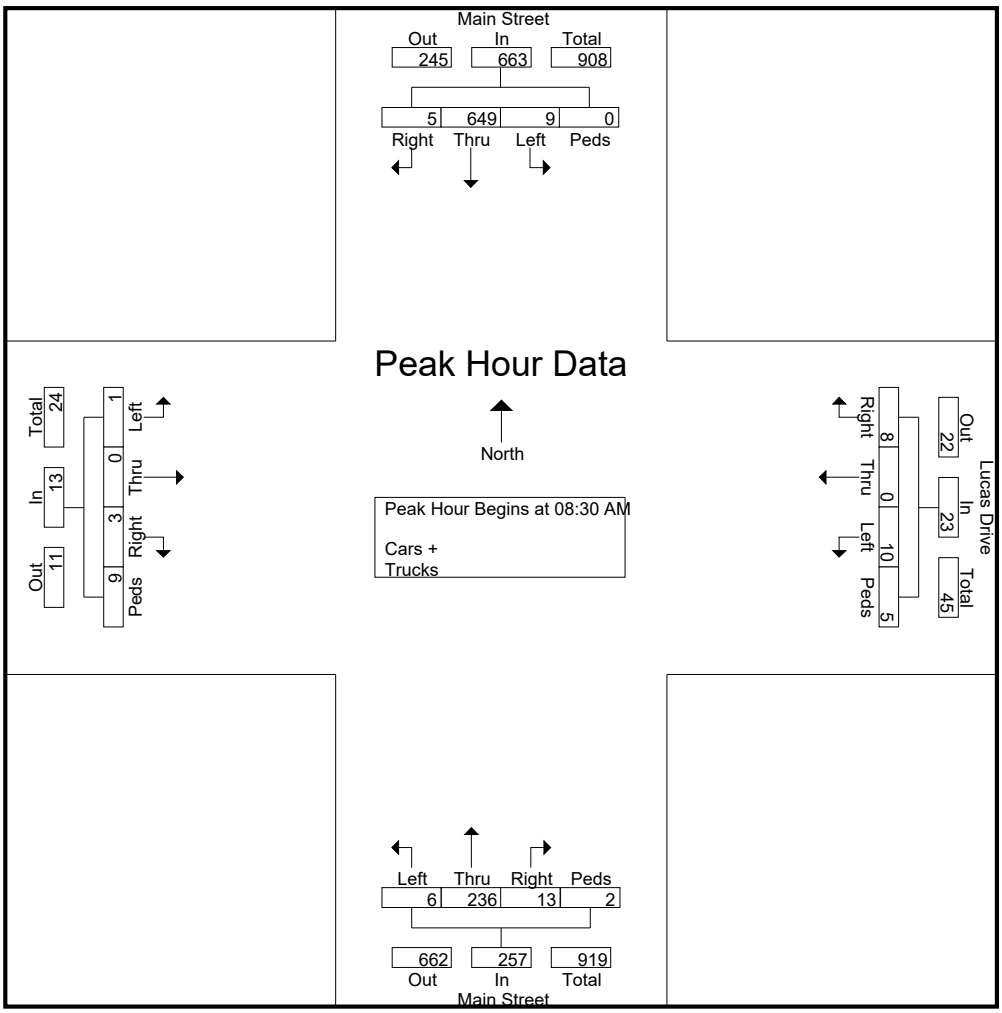

File Name : Blacksburg(Main and Lucas) 2
Site Code :
Start Date : 11/27/2018
Page No : 4

	Main Street Southbound					Lucas Drive Westbound					Main Street Northbound					Eastbound					
Start Time	Right	Thru	Left	Peds	App. Total	Right	Thru	Left	Peds	App. Total	Right	Thru	Left	Peds	App. Total	Right	Thru	Left	Peds	App. Total	Int. Total
Peak Hour Analysis From 12:00 PM to 06:45 PM - Peak 1 of 1																					
Peak Hour for Entire Intersection Begins at 04:30 PM																					
04:30 PM	1	160	2	0	163	5	0	3	1	9	3	115	2	0	120	1	0	2	4	7	299
04:45 PM	1	184	0	0	185	3	0	4	1	8	6	143	0	0	149	1	0	0	2	3	345
05:00 PM	1	120	3	0	124	1	0	4	2	7	7	162	0	1	170	3	0	0	3	6	307
05:15 PM	2	151	3	0	156	4	0	0	3	7	6	167	2	0	175	2	0	0	2	4	342
Total Volume	5	615	8	0	628	13	0	11	7	31	22	587	4	1	614	7	0	2	11	20	1293
% App. Total																					
PHF	.625	.836	.667	.000	.849	.650	.000	.688	.583	.861	.786	.879	.500	.250	.877	.583	.000	.250	.688	.714	.937

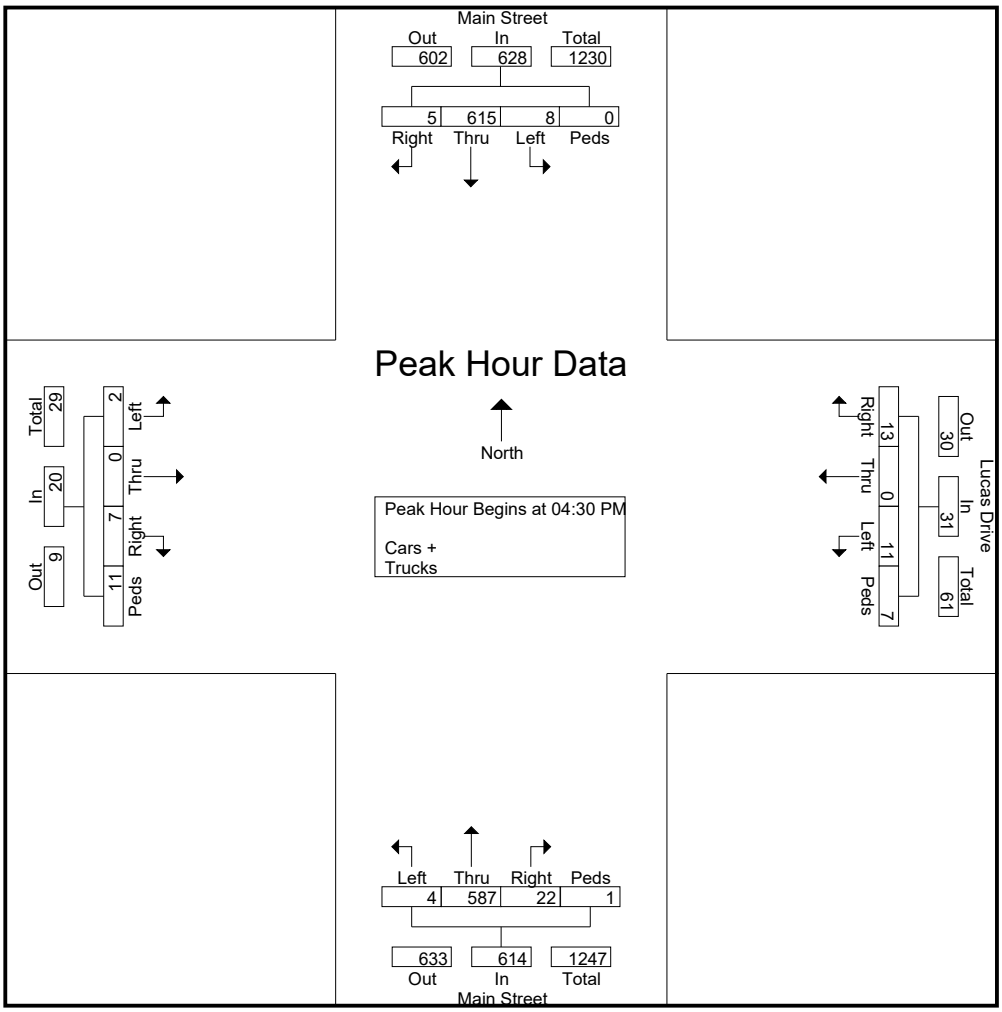

RAMEY KEMP & ASSOCIATES
TRANSPORTATION ENGINEERS

RKA Project Number: THE STANDARD @ BLACKSBURG - 19025 Sheet No.____ of___

Project Description: PM PEAK HOUR COUNTS 4:45-5:45 PM Date: 2-26-19

AM PEAK HOUR COUNTS 8:30-9:30 PM

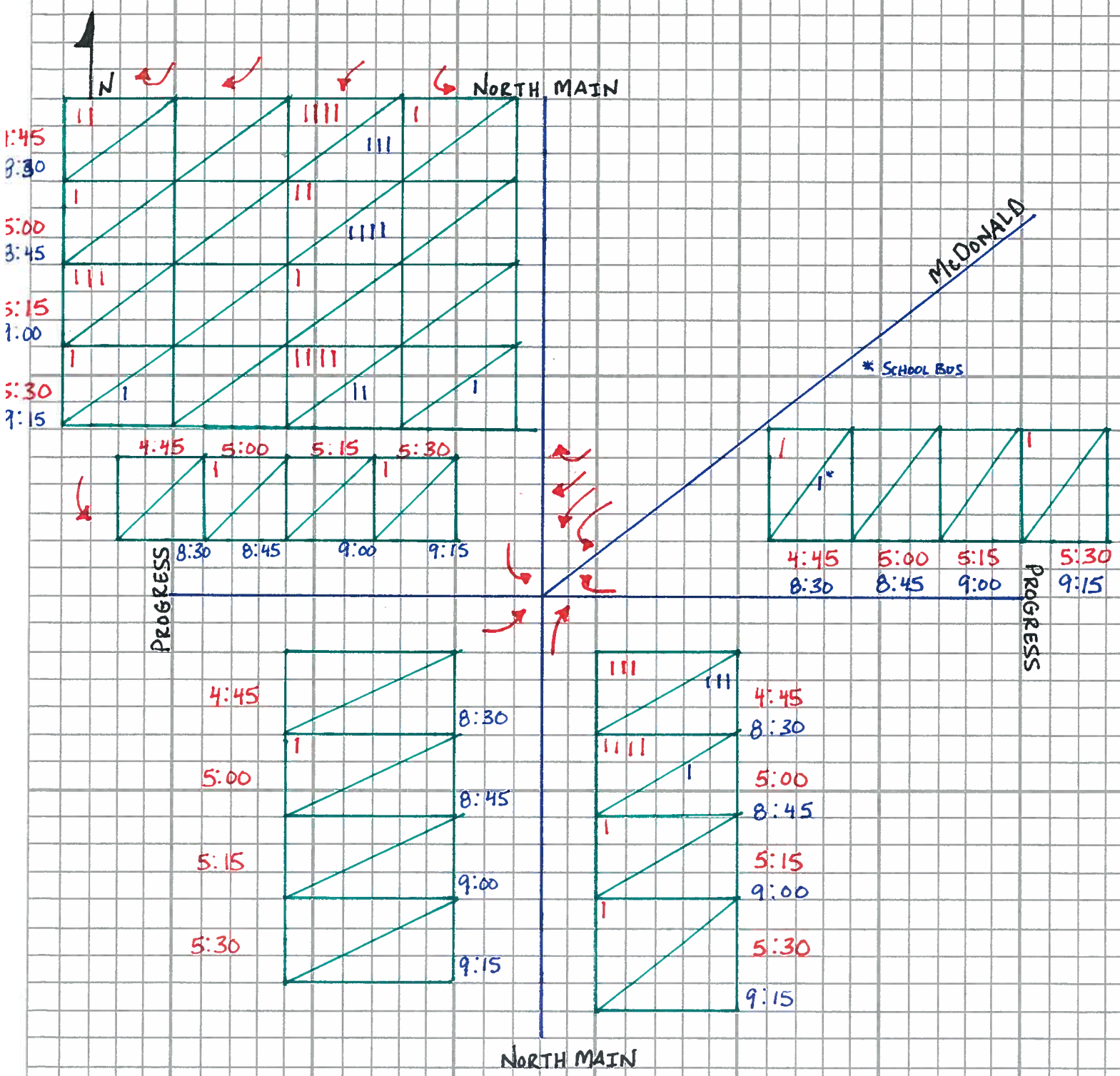

APPENDIX B

SIGNAL DATA

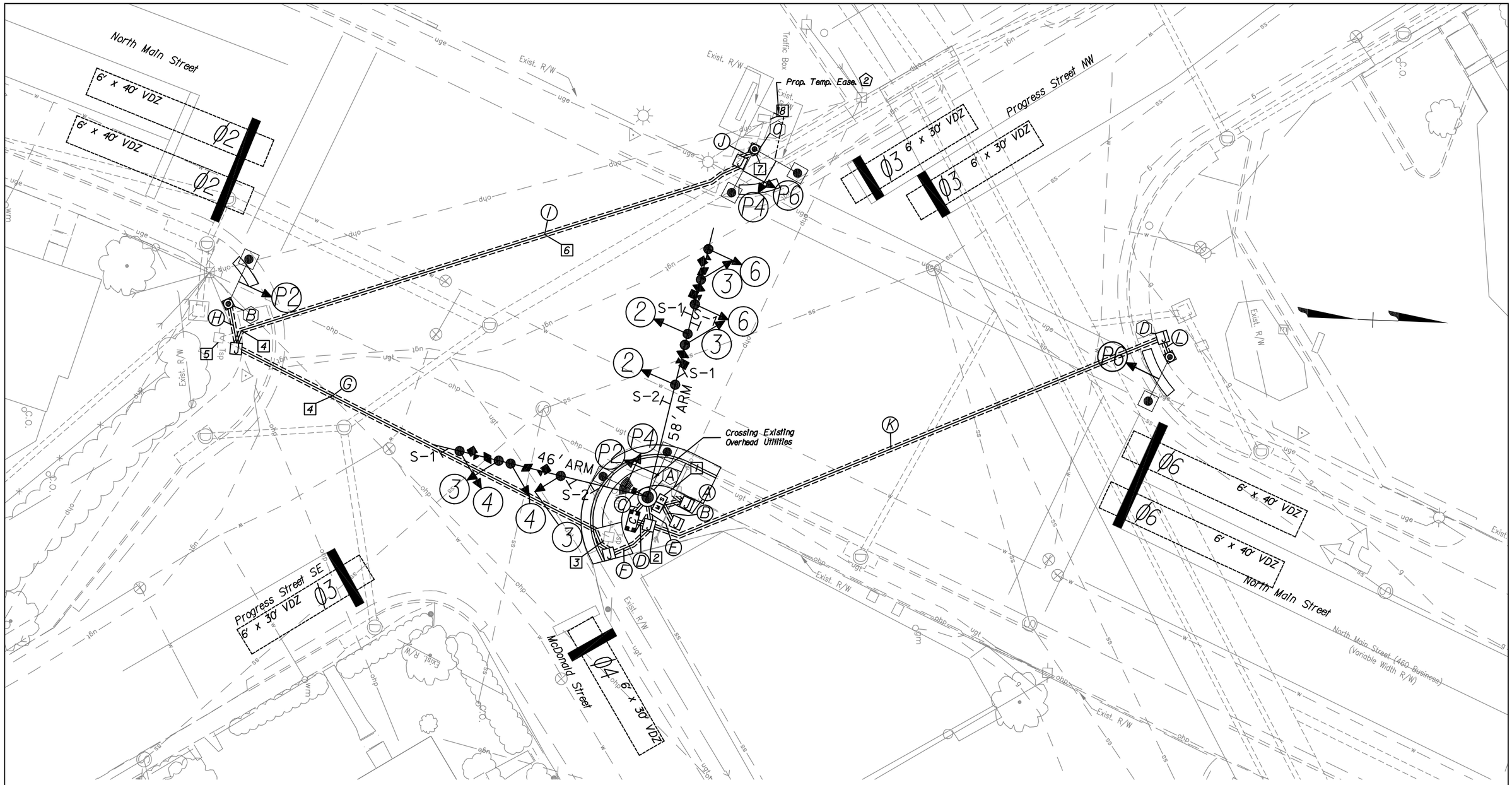

Construction Notes

1. Install VDOT Std SE-3B Underground Electrical Service
2. Install VDOT Std JB-S3 Junction Box
3. Remove Existing Traffic Signal Pole, and remove foundation to 24" below grade. Place new JB-S2 over or adjacent to foundation to intercept existing conduit, or to serve new Conduit Run G, if existing conduit cannot be reused.
4. For Conduit Run G, if existing conduit can be reused and has sufficient capacity, Contractor may utilize existing conduit with approval from the Town Engineer. If the conduit cannot be reused, then install new conduit as shown.
5. Remove Existing Traffic Signal Pole, and remove foundation to 12" below grade. Place new JB-S2 adjacent to foundation to intercept existing conduits, or to serve new Conduit Runs G, H, and I.
6. For Conduit Run I, if existing conduit can be reused and has sufficient capacity, Contractor may utilize existing conduit with approval from the Town Engineer. If the conduit cannot be reused, then install new conduit as shown.
7. New Pedestrian Pole to be located at location of existing traffic signal pole. Contractor may utilize the existing foundation with required modifications if is it determined to be adequate and with approval of the Town Engineer. Otherwise a new foundation and JB-S2 (to intercept existing conduit or to serve new Conduit Run I) shall be placed adjacent to the existing foundation after traffic signal pole is removed and existing foundation is removed to 12" below existing grade.
8. Remove Existing Traffic Signal Controller Cabinet and Foundation

SIGNALS

ALL SIGNALS SHALL BE LED & EQUIPPED WITH BACKPLATES

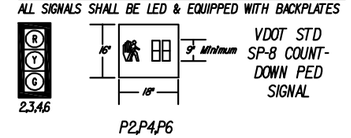

2 Proposed Temporary Easement for the Town of Blacksburg

Notes:
See Sheet 16A for signal details
See Sheet 17 for pole details

PHASING DIAGRAM

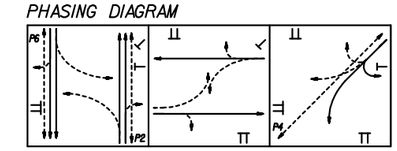

SCALE
0 10' 20'

Rev	Date	Description

WHITMAN, REQUARDT & ASSOCIATES, LLP
1700 Kraft Drive, Suite 1300, Blacksburg, VA 24060

Town of Blacksburg
300 South Main Street
Blacksburg, VA 24062

Work Order: 45390-001

Main Street Phase 2
Traffic Signal Improvements

Drawing
Signal Plan
Progress Street - ADDITIVE B

Sheet
21

MAINTENANCE OF TRAFFIC AND SEQUENCE OF CONSTRUCTION

1. Prior to beginning work, Contractor shall contact and coordinate activities with local utility companies for field marking and/or relocating utilities, where required. Contractor shall bear full responsibility for coordination with utility companies.

2. Prior to beginning work that requires lane or roadway closures, Contractor shall submit Temporary Traffic Control Plan to Town Engineer for review and approval, no fewer than five (5) business days prior to beginning work.

3. Install temporary signs on North Main Street, Progress Street, and McDonald Street as needed. Placement of signs is to be done per the direction of Town Engineer. All construction signs should be placed in accordance with MUTCD and VA WAPM standards.

4. Re-route pedestrians in accordance with MUTCD standards, where required.

5. Excavate for and place traffic signal pole and cabinet foundations (completing installation of) for proposed signal equipment outside of roadway (which can run concurrently with other work).

6. Install conduits, junction boxes, and electrical service in quadrant between North Main Street and McDonald Street, to facilitate operation of new traffic signal and traffic signal controller. Pedestrian equipment shall be added after removal of existing traffic signal equipment.

7. Test operation of new traffic signal controller and traffic signal equipment. Upon completion of testing and approval of Town Engineer, take existing traffic signal out of service, remove non-transparent coverings from new signs and traffic signal heads, and switch intersection traffic control to new traffic signal.

8. Remove existing traffic signal mast arms, poles, and controller. Contractor shall inspect existing conduits that cross east leg of Progress Street and south leg of North Main Street and determine, with Town approval, if existing conduit can be re-used. DO NOT REMOVE advance emergency pre-emption detector located along Progress Street.

9. Re-connect existing advance emergency vehicle pre-emption detector located along Progress Street east of the intersection to new pre-emption monitor.

10. Bore all conduit that crosses Progress Street and Main Street, one street at a time for each conduit crossing. If existing conduit is in place, is in acceptable condition, and can be utilized for the crossing of the east leg of Progress Street and/or the south leg of Main Street, the contractor may, with the approval of the Town Engineer, utilize the existing conduit in lieu of boring new conduit for these crossings, provided they have sufficient capacity for the proposed cabling.

11. Excavate for and place pedestrian signal poles and junction boxes (completing installation of) for proposed pedestrian signal equipment outside of roadway (which can run concurrently with other work), and install all pedestrian push buttons, pedestrian signal heads, and pedestrian signs.

12. Mill existing pavement.

13. Place subbase and base material in curb radius.

14. Remove existing sidewalk and curb ramp, and place new sidewalk, curb ramp, and curb.

15. Place surface material.

16. Place pavement markings.

17. Test operation of pedestrian signal equipment. Upon completion of testing period and approval of Town Engineer, remove non-transparent coverings from new signs and pedestrian signal heads, and place pedestrian signal equipment into operation.

18. Repair existing sidewalks and parking areas where existing traffic signal equipment is removed. Repairs shall be done to Town standards and to match existing sidewalk standards.

19. Contractor shall verify communications for the traffic signal system and ensure that all equipment is functioning correctly.

20. Variations to this MOT/SOC can be approved by the Town Engineer.

NOTE: On the dates of Virginia Tech home footballs games, no work shall be performed from 12:00 noon on the day before the home game through 12:00 noon on the day after the game.

INITIAL TIMING CHART

PHASE	1	2	3	4	5	6	7	8
MOVEMENT	N/A	NB	EB/WB	SWB	N/A	SB	N/A	N/A
PHASE ON		X	X	X		X		
PHASE OFF	X				X		X	X
MIN GR		15.0	8.0	5.0		15.0		
PASSAGE		3.0	3.0	3.0		3.0		
AMBER		4.0	3.5	3.0		4.0		
RED		3.0	3.0	3.0		3.0		
MAX 1		45.0	25.0	30.0		45.0		
MIN GAP		3.0	3.0	3.0		3.0		
PED WALK		7.0		7.0		7.0		
PED CLEARANCE		23.0		16.0		25.0		
MODE		MAX RECALL	10 SEC DELAY	10 SEC DELAY		MAX RECALL		

COLOR SEQUENCE CHART

SIGNAL	PHASES 2	3	4	6	COMB 2-6	PRE-EMPTION 2	3	4	6	FLASH
2	G				G	G				
3		G					G			Y
4			G					G		
6				G	G				G	Y
P2	W									BLANK
P4			W							BLANK
P6				W	W					BLANK

BLANK SPACES DENOTE RED OR DON'T WALK SIGNAL INDICATIONS
FY DENOTES FLASHING YELLOW

CLEARANCE CHART

R/W	CLEARANCE 1	CLEARANCE 2	NEXT PHASE
G	G	G	G
G	A	R	R
W	FDW	DW	DW
W	W	W	W

CONDUIT RUN DETAILS

Ⓐ 1 - 1.5" Conduit (M)
3 - #6 AWG Cables for Electrical Service
1 - #6 AWG (EGC) for System Grounding
1 - 1" Conduit

Ⓑ 1 - 1" Conduit (M)
1 - #6 AWG (EGC) for System Grounding

Ⓒ 1 - 1.5" Conduit (M)
3 - #6 AWG (EGC) for Electrical Service

Ⓓ 3 - 4" Conduits (One as Spare)
5 - 14-4 Conductor Cable for Heads 2,3(2),4,6
6 - 14-5 Conductor Cable for Heads P2(2),P4(2),P6(2)
6 - 14-3 Conductor Cable for P.B. P2(2),P4(2),P6(2)
5 - 18/6-Pair Conductor Cable for Video
5 - 20/3c Emergency Pre-emption Detection Cable
1 - Coaxial Cable for Radio Antenna
1 - #6 AWG (EGC)

Ⓔ 1 - 4" Conduit
5 - 14-4 Conductor Cable for Heads 2,3(2),4,6
2 - 14-5 Conductor Cable for Heads P2,P4
2 - 14-3 Conductor Cable for P.B. P2,P4
5 - 18/6-Pair Conductor Cable for Video
5 - 20/3c Emergency Pre-emption Detection Cable
1 - Coaxial Cable for Radio Antenna
1 - #6 AWG (EGC)

Ⓕ 2 - 3" Conduits (One as Spare)
3 - 14-3 Conductor Cable for P.B. P2,P4,P6
3 - 14-5 Conductor Cable for Heads P2,P4,P6
1 - #6 AWG (EGC)

Ⓖ 2 - 3" Bored Conduits (Can Utilize Existing Conduit with Town's Permission)
3 - 14-3 Conductor Cable for P.B. P2,P4,P6
3 - 14-5 Conductor Cable for Heads P2,P4,P6
1 - #6 AWG (EGC)

Ⓗ 1 - 2" Conduit
1 - 14-3 Conductor Cable for P.B. P2
1 - 14-5 Conductor Cable for Head P2
1 - #6 AWG (EGC)

Ⓘ 2 - 2" Bored Conduits (Can Utilize Existing Conduit with Town's Permission)
2 - 14-3 Conductor Cable for P.B. P4,P6
2 - 14-5 Conductor Cable for Heads P4,P6
1 - #6 AWG (EGC)

Ⓙ 1 - 2" Conduit
2 - 14-3 Conductor Cable for P.B. P4,P6
2 - 14-5 Conductor Cable for Heads P4,P6
1 - #6 AWG (EGC)

Ⓚ 2 - 2" Bored Conduits (One as Spare)
1 - 14-5 Conductor Cable for Head P6
1 - 14-3 Conductor Cable for P.B. P6
1 - #6 AWG (EGC)

Ⓛ 1 - 2" Conduit
1 - 14-5 Conductor Cable for Head P6
1 - 14-3 Conductor Cable for P.B. P6
1 - #6 AWG (EGC)

SIGNS

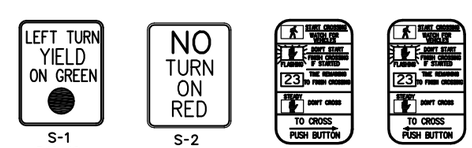

S-1
R10-12
24"x30"

S-2
R10-11a
24"x30"

S-3
R10-3e
(RIGHT)
9"X15"

S-4
R10-3e
(LEFT)
9"X15"

Notes:
See Sheet 21 for signal plan
See Sheet 22 for pole details

Rev	Date	Description

WHITMAN, REQUARDT & ASSOCIATES, LLP
1700 Kraft Drive, Suite 1200, Blacksburg, VA 24060

Town of Blacksburg
300 South Main Street
Blacksburg, VA 24062

Work Order: 45390-001

Main Street Phase 2
Traffic Signal Improvements

Drawing
Signal Plan Details
Progress Street - ADDITIVE B

Sheet
21A

North Main & Progress

Check/reset time clock
Check/verify standard Ring Structure
Input Traffic Events
Input Equate Data
Vehicle Recalls - Min for Phases 2 & 6
Lock/Non-Lock - Check settings
Check Dual Entry settings - 2, 6
Switch Phase: None
Detector Delay - 10 sec Phase 5

Coordination Settings							
OPER	MODE	MAX	CORR	OFST	FRCE	MX DWLL	YIELD
0 - FREE	0	0	0	0	0	0	0

	Clearance Intervals							
Phase	1 -	2 - NBT	3 - EB/WB	4 - SWB	5 - NBL	6 - SBT	7 -	8 -
Min Green	X	15	8	5	5	15	X	X
Max1	X	45	25	30	15	45	X	X
Yellow	X	3.4	3.9	3.4	3.4	3.4	X	X
Red	X	5.0	3.1	3.9	5.0	5.0	X	X

	Pedestrian Clearance Intervals							
Phase	1 -	2 - NBT	3 - EB/WB	4 - SWB	5 - NBL	6 - SBT	7 -	8 -
Walk	X	5	X	5	X	5	X	X
Flash D/W	X	20	X	12	X	20	X	X

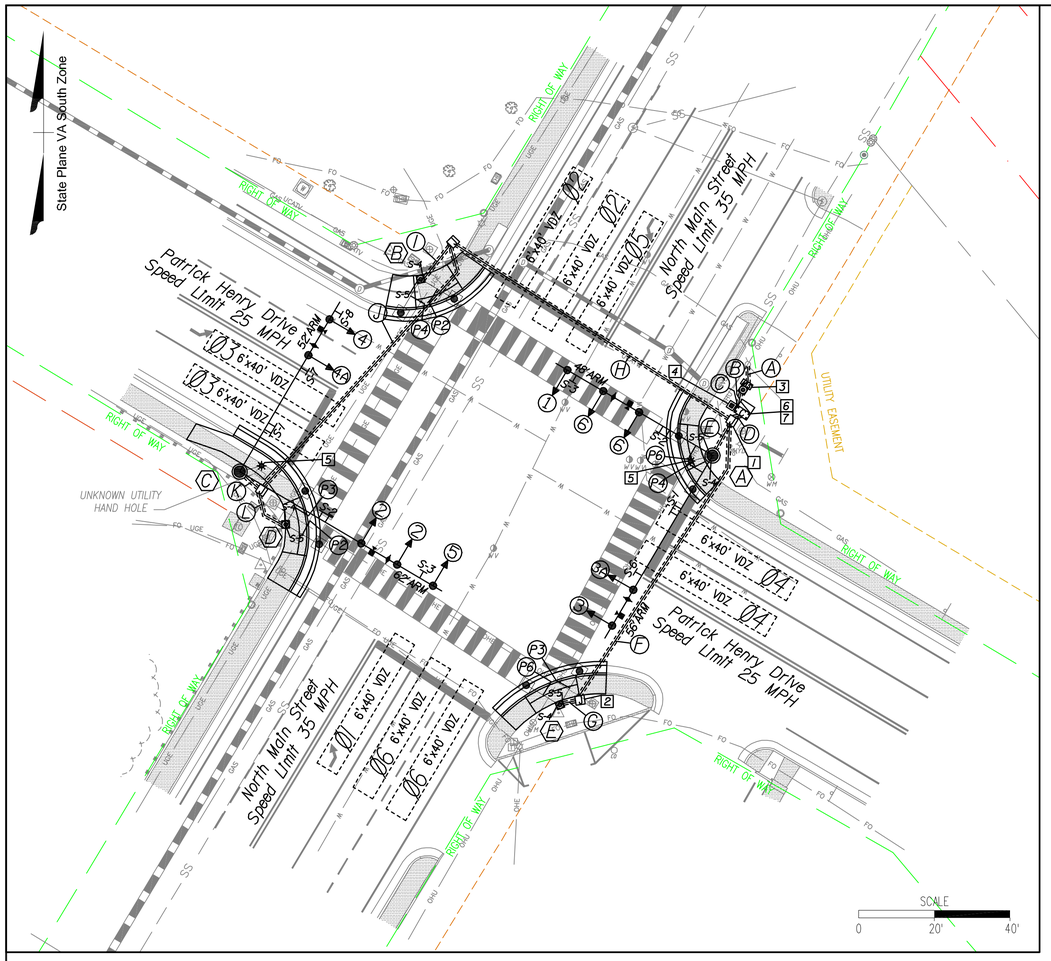

SIGNALS

ALL SIGNALS SHALL BE 12" LED & EQUIPPED WITH BACKPLATES

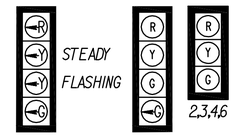

P2,P3,P4,P6
VDOT STD SP-8
COUNTDOWN PED SIGNAL

PROPOSED SIGNS
SEE SHEET T-2 FOR S-1, S-2

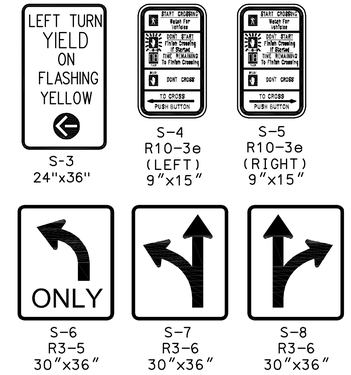

POLE DETAILS

(B) (D) (E) VDOT Standard PF-2 Pedestal Poles (10')

(A) MAST ARM POLE w/ LUMINAIRE
Luminaire 235° to North Main Street
48' Arm 270° to North Main Street
Signal Placement: 22', 33', 44'
Sign Placement: 14', 41'
Camera Placement: 26'
EVP Placement: 30'

56' Arm 180° to North Main Street
Signal Placement: 41', 52'
Sign Placement: 17', 37'
Camera Placement: 49'
EVP Placement: 44'

(C) MAST ARM POLE w/ LUMINAIRE
Luminaire 45° to North Main Street
62' Arm 90° to North Main Street
Signal Placement: 37', 48', 59'
Sign Placement: 25', 55'
Camera Placement: 41'
EVP Placement: 45'

52' Arm 0° to North Main Street
Signal Placement: 36', 47'
Sign Placement: 14', 32', 50'
Camera Placement: 43'
EVP Placement: 39'

CONSTRUCTION NOTES

1. Install VDOT Std JB-S3 Junction Box
2. Install VDOT Std JB-S1 Junction Box
3. Install SE-5 Underground Electrical Service, Connect to Existing Electrical Service Location
4. Construct 26"x24" Concrete Foundation for Natural Gas-Powered Back-up Generator
5. Install 250 Watt High Pressure Sodium Decorative Luminaire on 6-foot Decorative Arm with 25-foot Mounting Height
6. Install VDOT Std CF-1 Controller Foundation
7. Install 16"x12"x6" Shaefer Elec. Enclosure for IT Purposes, to be Mounted on the Side of the Signal Controller Cabinet. CAT# SPN 4SS-16126

PREEMPTION PHASING DIAGRAM

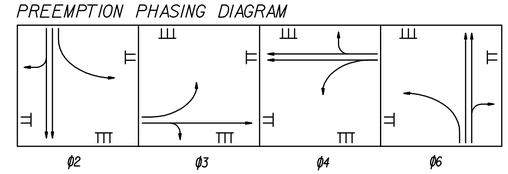

PHASING DIAGRAM

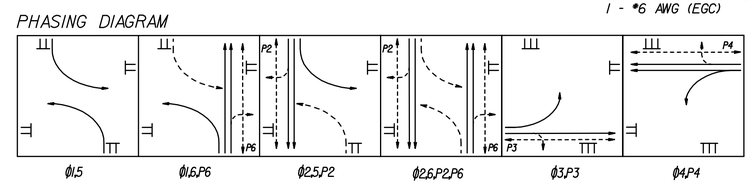

CONDUIT RUN DETAILS

(A) 1 - 2" Conduit
3 - #6 AWG Cables for Electrical Service Cable

(B) 1 - 1.25" Metal Conduit
3 - #6 AWG Cables for Electrical Service

(C) 1 - 2" Conduit
3 - #6 AWG Cables for Electrical Service Backup

(D) 3 - 4" Conduits (One as Spare)
4 - 14-4 Conductor Cable for Heads 2,3,4,6
4 - 14-7 Conductor Cable for Heads 1,3A,4A,5
8 - 14-5 Conductor Cable for Heads P2(2),P3(2),P4(2),P6(2)
8 - 14-3 Conductor Cable for Push Buttons P2(2),P3(2),P4(2),P6(2)
4 - 16-3 Conductor Cable for Video Detection
4 - Coaxial Cable for Video Detection
4 - 20-3c Emergency Preemption Detection Cable
4 - 14-4 Conductor Cable for Preemption Confirmation Lights
2 - 12-2 Conductor Cable for Lighting
3 - #6 AWG (EGC)

(E) 1 - 4" Conduit
2 - 14-4 Conductor Cable for Heads 3,6
2 - 14-7 Conductor Cable for Head 1,3A
2 - 14-5 Conductor Cable for Heads P4,P6
2 - 14-3 Conductor Cable for Push Buttons P4,P6
2 - 16-3 Conductor Cable for Video Detection
2 - Coaxial Cable for Video Detection
2 - 20-3c Emergency Preemption Detection Cable
2 - 14-4 Conductor Cable for Preemption Confirmation Lights
1 - 12-2c Conductor Cable for Lighting
2 - #6 AWG (EGC)

(F) 2 - 2" Bored Conduit (One as Spare)
2 - 14-5 Conductor Cable for Heads P3,P6
2 - 14-3 Conductor Cable for Push Buttons P3,P6
1 - #6 AWG (EGC)

(G) 1 - 2" Conduit
2 - 14-5 Conductor Cable for Heads P3,P6
2 - 14-3 Conductor Cable for Push Buttons P3,P6
1 - #6 AWG (EGC)

(H) 2 - 4" Bored Conduit (One as Spare)
2 - 14-4 Conductor Cable for Heads 2,4
2 - 14-7 Conductor Cable for Heads 4A,5
4 - 14-5 Conductor Cable for Heads P2(2),P3,P4
4 - 14-3 Conductor Cable for Push Buttons P2(2),P3,P4
2 - 16-3 Conductor Cable for Video Detection
2 - Coaxial Cable for Video Detection
2 - 20-3c Emergency Preemption Detection Cable
2 - 14-4 Conductor Cable for Preemption Confirmation Lights
1 - 12-2c Conductor Cable for Lighting
2 - #6 AWG (EGC)

(I) 1 - 2" Conduit
2 - 14-5 Conductor Cable for Heads P2,P4
2 - 14-3 Conductor Cable for Push Buttons P2,P4
1 - #6 AWG (EGC)

(J) 1 - 4" Bored Conduit
1 - 2" Conduit (As Spare)
2 - 14-4 Conductor Cable for Heads 2,4
2 - 14-7 Conductor Cable for Heads 4A,5
2 - 14-5 Conductor Cable for Heads P2,P3
2 - 14-3 Conductor Cable for Push Buttons P2,P3
2 - 16-3 Conductor Cable for Video Detection
2 - Coaxial Cable for Video Detection
2 - 20-3c Emergency Preemption Detection Cable
2 - 14-4 Conductor Cable for Preemption Confirmation Lights
1 - 12-2c Conductor Cable for Lighting
1 - #6 AWG (EGC)

(K) 1 - 4" Conduit
2 - 14-4 Conductor Cable for Heads 2,4
2 - 14-7 Conductor Cable for Heads 4A,5
2 - 16-3 Conductor Cable for Video Detection
2 - Coaxial Cable for Video Detection
2 - 20-3c Emergency Preemption Detection Cable
2 - 14-4 Conductor Cable for Preemption Confirmation Lights
1 - 12-2c Conductor Cable for Lighting
1 - #6 AWG (EGC)

(L) 1 - 2" Conduit
2 - 14-5 Conductor Cable for Heads P2,P3
2 - 14-3 Conductor Cable for Push Buttons P2,P3
1 - #6 AWG (EGC)

COLOR SEQUENCE CHART

SIGNAL	PHASES						COMBINATIONS				PRE-EMPTION				FLASH
	1	2	3	4	5	6	1-5	1-6	2-5	2-6	2	3	4	6	
1	~~G~~					~~FY~~	~~G~~	~~G~~	~~FY~~	~~FY~~				~~G~~	
2		G							G	G	G				Y
3			G									G			
3A			~~G~~/G									~~G~~/G			
4				G									G		
4A				~~G~~/G									~~G~~/G		
5		~~FY~~			~~G~~		~~G~~	~~FY~~	~~G~~	~~FY~~	~~G~~				
6						G		G		G				G	Y
P2		W							W	W					BLANK
P3			W												BLANK
P4				W											BLANK
P6						W		W		W					BLANK

BLANK SPACES DENOTE RED OR DON'T WALK SIGNAL INDICATIONS
FY DENOTES FLASHING YELLOW

INITIAL TIMING CHART

PHASE	1	2	3	4	5	6	7	8
MOVEMENT	NB LEFT	SB THRU-RIGHT	EB	WB	SB LEFT	NB THRU-RIGHT		
PHASE ON	X	X	X	X	X	X		
PHASE OFF							X	X
MIN GR	5.0	15.0	5.0	8.0	5.0	15.0		
PASSAGE	3.0	3.0	3.0	3.0	3.0	3.0		
AMBER	3.5	4.5	3.0	3.0	3.5	4.5		
RED	2.5	2.0	3.0	3.0	2.5	2.0		
MAX I	25.0	45.0	35.0	35.0	25.0	45.0		
MIN GAP	3.0	3.0	3.0	3.0	3.0	3.0		
PED WALK		7.0	7.0	7.0		7.0		
PED CLEARANCE		20.0	22.0	21.0		20.0		
MODE	NON LOCK LEAD	MIN-RECALL	10-SEC DELAY	10-SEC DELAY	NON LOCK LEAD	MIN-RECALL		

Rev	Date	Description
#1	10-03-16	Addressed Pre-Bid Meeting comments

Whitman, Requardt & Associates, LLP
1700 Kraft Drive, Suite 1200, Blacksburg, Virginia 24060

Town of Blacksburg
300 South Main Street
Blacksburg, VA 24062

North Main Street at Patrick Henry Drive
Intersection Improvements

Work Order
45825-000

Drawing
Traffic Signal Plan

Sheet
T-4

North Main & Patrick Henry

Check/reset time clock
Check/verify standard Ring Structure
Input Traffic Events
Input Equate Data
Vehicle Recalls - Min for Phases 2 & 6
Lock/Non-Lock - Check settings
Check Dual Entry settings - 2, 6
Switch Phase: None
Detector Delay - 10 sec Phases 1,3,4,5

Coordination Settings							
OPER	MODE	MAX	CORR	OFST	FRCE	MX DWLL	YIELD
0 - FREE	0	0	0	0	0	0	0

	Clearance Intervals							
Phase	1 - NBL	2 - SBT	3 - WB	4 - EB	5 - SBL	6 - NBT	7 -	8 -
Min Green	5	15	8	8	5	15	X	X
Max1	25	45	35	35	25	45	X	X
Yellow	4.4	4.4	3.1	3.0	4.4	4.4	X	X
Red	2.6	2.6	2.4	2.6	2.6	2.6	X	X

	Pedestrian Clearance Intervals							
Phase	1 - NBL	2 - SBT	3 - WB	4 - EB	5 - SBL	6 - NBT	7 -	8 -
Walk	X	5	5	5	X	5	X	X
Flash D/W	X	15	15	17	X	15	X	X

APPENDIX C

APPROVED DEVELOPMENT DATA

4. Trip Generation

Trip generation for this study was based on the concept plan created by Balzer and Associates, Inc. (please see Appendix B) and information provided by the developer regarding the expected uses of the property. The policies and procedures found in the Institute of Transportation Engineers (ITE) *Trip Generation Manual, 10th Edition*, were employed to determine the potential site generated traffic volumes for the proposed development in the AM and PM peak hours.

For the off-campus student apartment use, trips were based on the total number of bedrooms. The projected trips were calculated using the equations and directional splits provided in the ITE Manual for student apartments over ½ mile from campus. The equations and directional splits are listed below:

Time Period:	Equation:	% Entering / % Exiting:
Weekday	T = 4.09(X) – 78.98	50% Enter / 50% Exit
AM Peak Hr of Adj. Traffic	T = 0.15(X) + 10.64	28% Enter / 72% Exit
PM Peak Hr of Adj. Traffic	T = 0.31(X) – 1.81	52% Enter / 48% Exit

			Trip Generation						
Land Use			AM Peak Hour			PM Peak Hour			Weekday
Proposed Development	ITE Code	Independent Variable	Enter	Exit	Total	Enter	Exit	Total	Total
Off Campus Student Apartments	225	215 Bedrooms	12	31	43	34	31	65	800

Table 4: Site-Generated Traffic

Based on knowledge of the area, it is anticipated that there will be significant usage of alternate means of transportation by residents of this development, including walking, bicycling, and bus via the Blacksburg Transit (BT). The BT is a particularly heavily used form of transportation, especially for trips to and from the Virginia Tech campus.

Based on discussions with the Town of Blacksburg, a 20% reduction has been applied to account for bus, pedestrian, and bicycle trips. Table 5 shows the site-generated trips with the 20% reduction.

			Trip Generation						
Land Use			AM Peak Hour			PM Peak Hour			Weekday
Proposed Development	ITE Code	Independent Variable	Enter	Exit	Total	Enter	Exit	Total	Total
Off Campus Student Apartments - Proposed	225	215 Bedrooms	10	24	34	27	25	52	640

Table 5: Site-Generated Traffic (With 20% Reduction)

FIGURE 4: SITE-GENERATED TRAFFIC

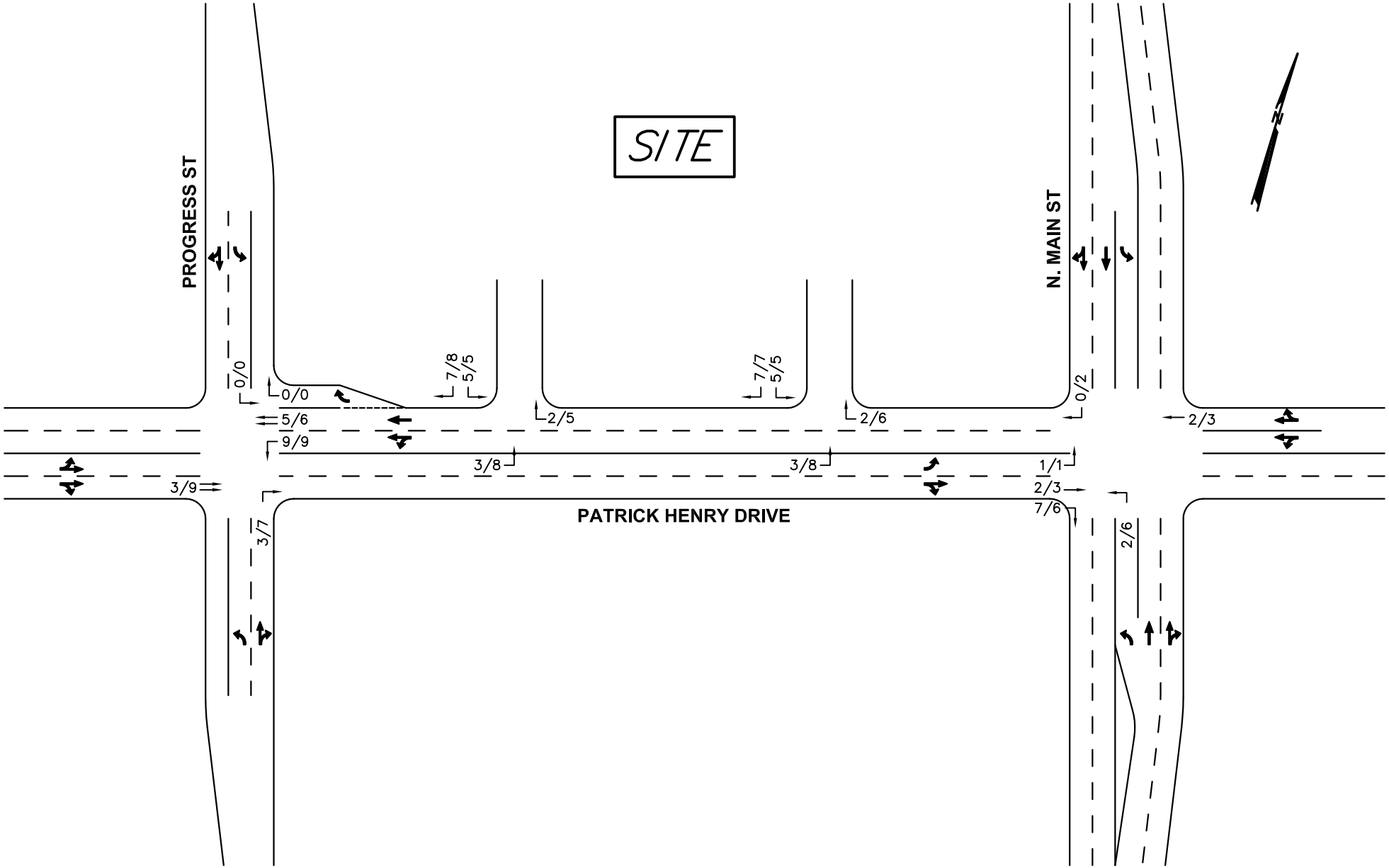

LEGEND

xx/xx: AM/PM Peak Hour Traffic

xx/xx: AM/PM Peak Hour Pedestrians

APPENDIX D

VDOT TURN LANE WARRANT CHARTS

NORTH MAIN STREET

AT

MONTGOMERY STREET

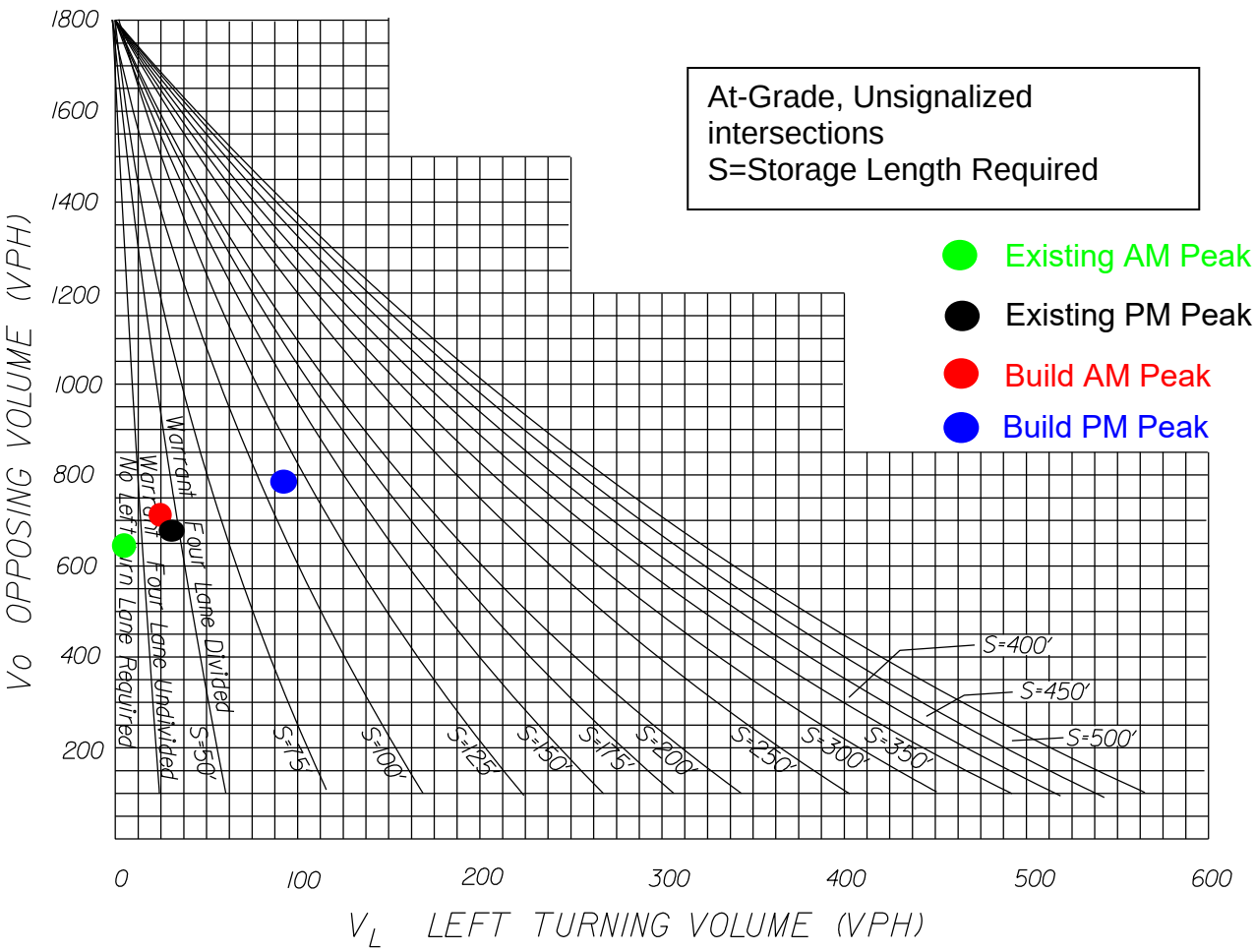

FIGURE 3-3

Warrants for Left Turn Storage Lanes on Four-Lane Highways

When the Average Running Speed on an existing facility is available, the corresponding Design Speed may be obtained from IIM LD- 117.

For plan detail requirements when curb and/or gutter are used, see VDOT's Road Design Manual, Section 2E-3.

Left-turn lanes should also be established on two-lane highways where traffic volumes are high enough to warrant them.

Warrants for Left-Turn Storage Lanes on Two-Lane Highways

The warrants in table below are taken from the 2004 AASHTO "Green Book", Page 685, Exhibit 9-75. They were derived from Highway Research Report No. 211, Figures 2 through 19, for required storage length determinations.

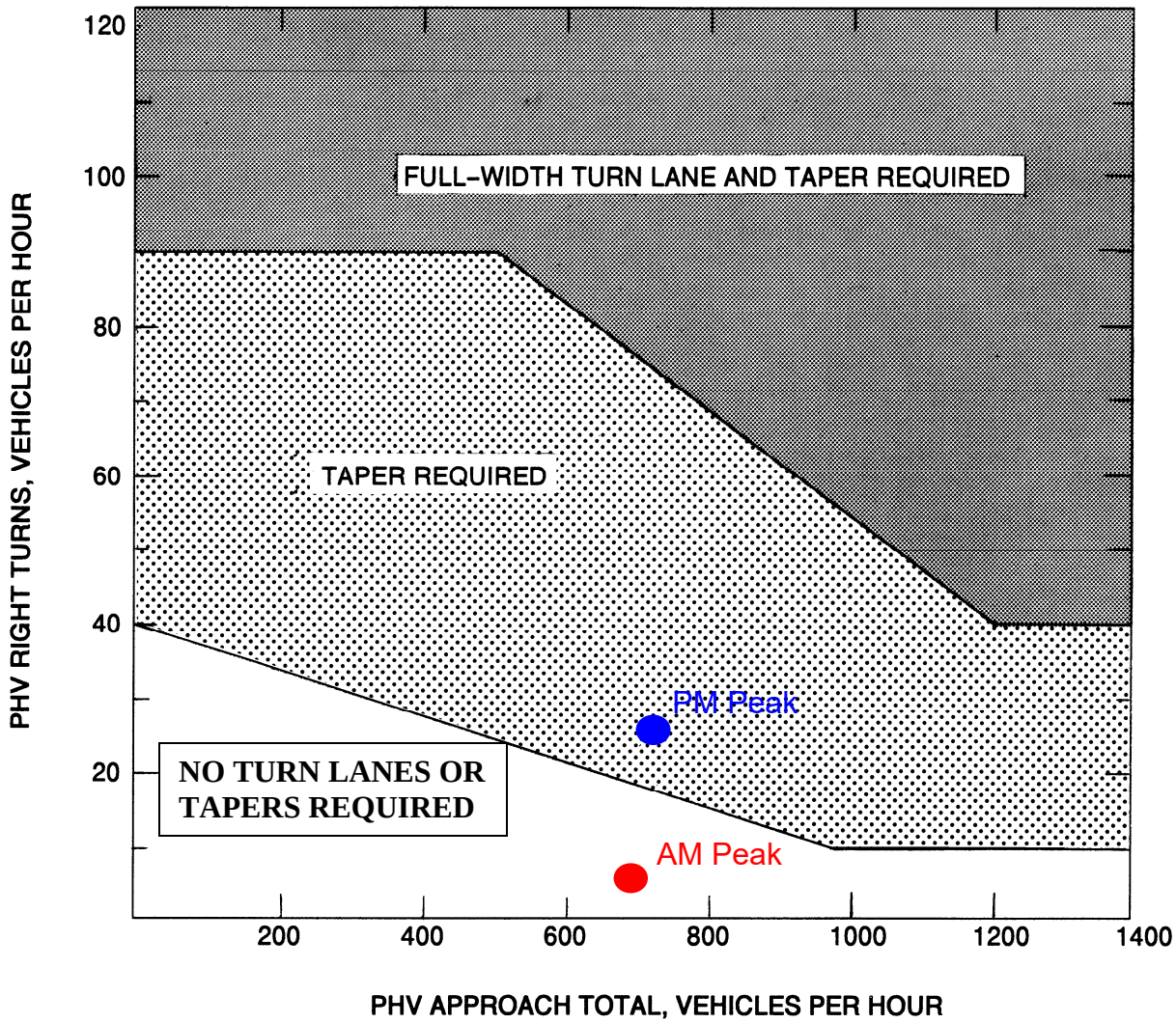

Appropriate Radius required at all Intersections and Entrances (Commercial or Private).

LEGEND

PHV- - Peak Hour Volume (also Design Hourly Volume equivalent)

Adjustment for Right Turns

If PHV is not known use formula: PHV = ADT x K x D
K = the percent of AADT occurring in the peak hour
D = the percent of traffic in the peak direction of flow
Note: An average of 11% for K x D will suffice.

FIGURE 3- 24 GUIDELINES FOR RIGHT TURN TREATMENT (4-LANE HIGHWAY)

NORTH MAIN STREET

AT

SITE ACCESS

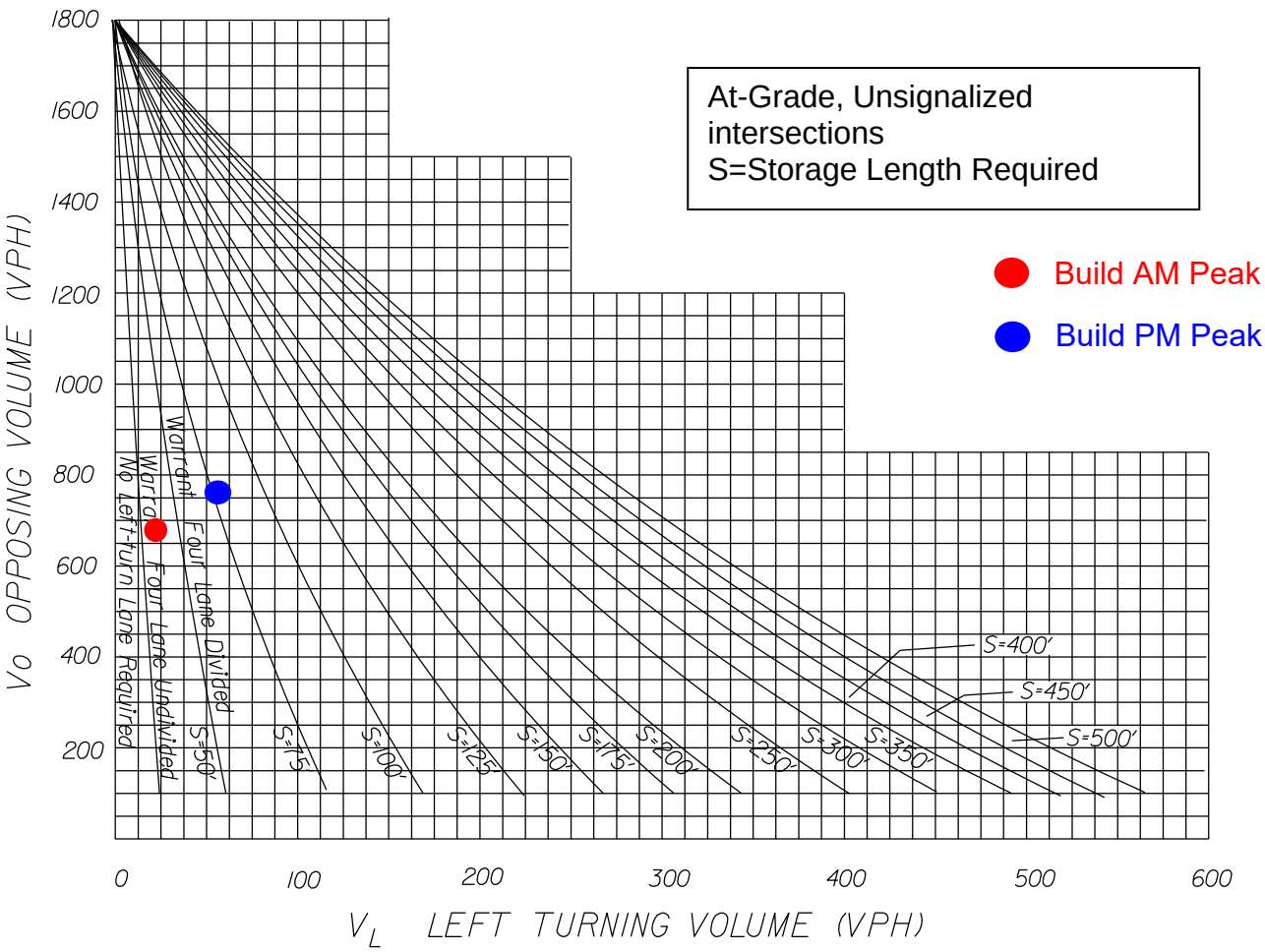

FIGURE 3-3

Warrants for Left Turn Storage Lanes on Four-Lane Highways

When the Average Running Speed on an existing facility is available, the corresponding Design Speed may be obtained from IIM LD- 117.

For plan detail requirements when curb and/or gutter are used, see VDOT's Road Design Manual, Section 2E-3.

Left-turn lanes should also be established on two-lane highways where traffic volumes are high enough to warrant them.

Warrants for Left-Turn Storage Lanes on Two-Lane Highways

The warrants in table below are taken from the 2004 AASHTO "Green Book", Page 685, Exhibit 9-75. They were derived from Highway Research Report No. 211, Figures 2 through 19, for required storage length determinations.

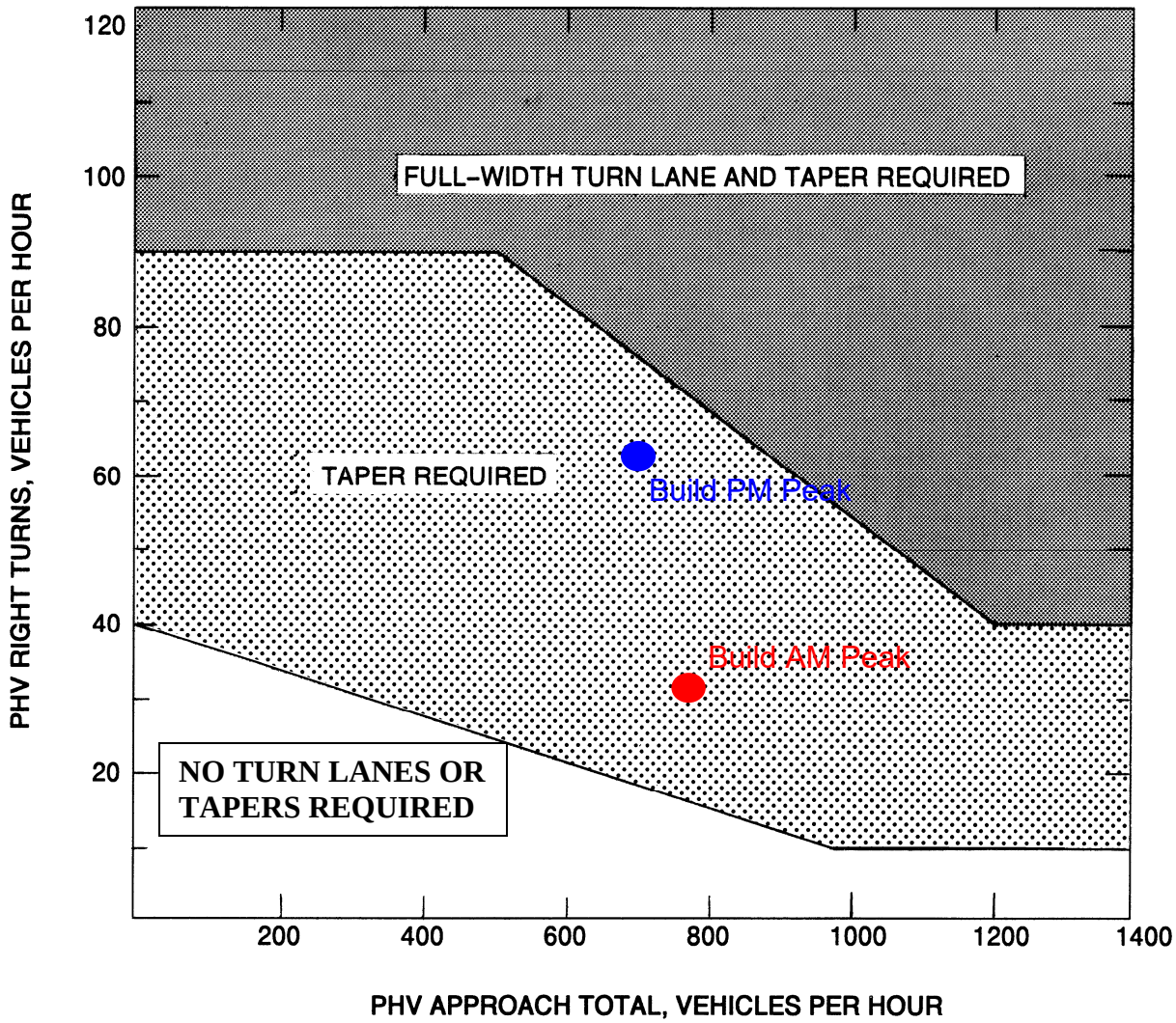

Appropriate Radius required at all Intersections and Entrances (Commercial or Private).

LEGEND

PHV- - Peak Hour Volume (also Design Hourly Volume equivalent)

Adjustment for Right Turns

If PHV is not known use formula: PHV = ADT x K x D
K = the percent of AADT occurring in the peak hour
D = the percent of traffic in the peak direction of flow
Note: An average of 11% for K x D will suffice.

FIGURE 3- 24 GUIDELINES FOR RIGHT TURN TREATMENT (4-LANE HIGHWAY)

APPENDIX E

CAPACITY ANALYSIS REPORTS

NORTH MAIN STREET

&

PROGRESS STREET/MCDONALD STREET

Lane Group	EBL2	EBT	EBR	WBL	WBT	WBR	WBR2	NBL	NBT	NBR	NBR2	SBL
Lane Configurations												
Traffic Volume (vph)	11	13	88	13	10	24	1	33	283	4	10	23
Future Volume (vph)	11	13	88	13	10	24	1	33	283	4	10	23
Ideal Flow (vphpl)	1900	1900	1900	1900	1900	1900	1900	1900	1900	1900	1900	1900
Lane Util. Factor	1.00	1.00	1.00	1.00	1.00	1.00	1.00	0.95	0.95	0.95	0.95	0.95
Frt		0.869			0.930				0.994			
Flt Protected	0.950				0.987				0.995			
Satd. Flow (prot)	1770	1619	0	0	1710	0	0	0	3500	0	0	0
Flt Permitted	0.723				0.882				0.846			
Satd. Flow (perm)	1347	1619	0	0	1528	0	0	0	2976	0	0	0
Right Turn on Red			Yes				No				No	
Satd. Flow (RTOR)		96										
Link Speed (mph)		25			25				35			
Link Distance (ft)		1700			1433				1490			
Travel Time (s)		46.4			39.1				29.0			
Peak Hour Factor	0.92	0.92	0.92	0.92	0.92	0.92	0.92	0.92	0.92	0.92	0.92	0.92
Adj. Flow (vph)	12	14	96	14	11	26	1	36	308	4	11	25
Shared Lane Traffic (%)												
Lane Group Flow (vph)	12	110	0	0	52	0	0	0	359	0	0	0
Turn Type	Perm	NA		Perm	NA			pm+pt	NA			Perm
Protected Phases		3			3			5	2			
Permitted Phases	3			3				2				6
Detector Phase	3	3		3	3			5	2			6
Switch Phase												
Minimum Initial (s)	8.0	8.0		8.0	8.0			5.0	15.0			15.0
Minimum Split (s)	15.0	15.0		15.0	15.0			14.0	40.0			40.0
Total Split (s)	15.0	15.0		15.0	15.0			14.0	55.0			41.0
Total Split (%)	15.8%	15.8%		15.8%	15.8%			14.7%	57.9%			43.2%
Yellow Time (s)	3.9	3.9		3.9	3.9			3.4	3.4			3.4
All-Red Time (s)	3.1	3.1		3.1	3.1			5.0	5.0			5.0
Lost Time Adjust (s)	-3.0	-3.0			-3.0				-4.4			
Total Lost Time (s)	4.0	4.0			4.0				4.0			
Lead/Lag	Lead	Lead		Lead	Lead			Lead				Lag
Lead-Lag Optimize?	Yes	Yes		Yes	Yes			Yes				Yes
Recall Mode	None	None		None	None			None	Min			Min
Act Effct Green (s)	11.4	11.4			11.4				25.9			
Actuated g/C Ratio	0.26	0.26			0.26				0.60			
v/c Ratio	0.03	0.22			0.13				0.20			
Control Delay	16.5	7.4			16.6				6.9			
Queue Delay	0.0	0.0			0.0				0.0			
Total Delay	16.5	7.4			16.6				6.9			
LOS	B	A			B				A			
Approach Delay		8.3			16.6				6.9			
Approach LOS		A			B				A			
Queue Length 50th (ft)	2	2			8				19			
Queue Length 95th (ft)	16	41			44				64			
Internal Link Dist (ft)		1620			1353				1410			
Turn Bay Length (ft)												
Base Capacity (vph)	354	497			402				2870			

Lane Group	SBT	SBR	SWL2	SWL	SWR2
Lane Configurations					
Traffic Volume (vph)	619	20	1	9	1
Future Volume (vph)	619	20	1	9	1
Ideal Flow (vphpl)	1900	1900	1900	1900	1900
Lane Util. Factor	0.95	0.95	1.00	1.00	1.00
Frt	0.995			0.989	
Flt Protected	0.998			0.956	
Satd. Flow (prot)	3514	0	0	1761	0
Flt Permitted	0.933			0.956	
Satd. Flow (perm)	3286	0	0	1761	0
Right Turn on Red		Yes			No
Satd. Flow (RTOR)	4				
Link Speed (mph)	35			30	
Link Distance (ft)	399			1152	
Travel Time (s)	7.8			26.2	
Peak Hour Factor	0.92	0.92	0.92	0.92	0.92
Adj. Flow (vph)	673	22	1	10	1
Shared Lane Traffic (%)					
Lane Group Flow (vph)	720	0	0	12	0
Turn Type	NA		Prot	Prot	
Protected Phases	6		4	4	
Permitted Phases					
Detector Phase	6		4	4	
Switch Phase					
Minimum Initial (s)	15.0		5.0	5.0	
Minimum Split (s)	40.0		25.0	25.0	
Total Split (s)	41.0		25.0	25.0	
Total Split (%)	43.2%		26.3%	26.3%	
Yellow Time (s)	3.4		3.4	3.4	
All-Red Time (s)	5.0		3.9	3.9	
Lost Time Adjust (s)	-4.4			-3.3	
Total Lost Time (s)	4.0			4.0	
Lead/Lag	Lag		Lag	Lag	
Lead-Lag Optimize?	Yes		Yes	Yes	
Recall Mode	Min		None	None	
Act Effct Green (s)	25.9			9.5	
Actuated g/C Ratio	0.60			0.22	
v/c Ratio	0.37			0.03	
Control Delay	7.7			17.3	
Queue Delay	0.0			0.0	
Total Delay	7.7			17.3	
LOS	A			B	
Approach Delay	7.7			17.3	
Approach LOS	A			B	
Queue Length 50th (ft)	43			2	
Queue Length 95th (ft)	132			16	
Internal Link Dist (ft)	319			1072	
Turn Bay Length (ft)					
Base Capacity (vph)	2910			885	

Lane Group	EBL2	EBT	EBR	WBL	WBT	WBR	WBR2	NBL	NBT	NBR	NBR2	SBL
Starvation Cap Reductn	0	0			0				0			
Spillback Cap Reductn	0	0			0				0			
Storage Cap Reductn	0	0			0				0			
Reduced v/c Ratio	0.03	0.22			0.13				0.13			

Intersection Summary

Area Type: Other
Cycle Length: 95
Actuated Cycle Length: 43.3
Natural Cycle: 95
Control Type: Actuated-Uncoordinated
Maximum v/c Ratio: 0.37
Intersection Signal Delay: 8.0 — Intersection LOS: A
Intersection Capacity Utilization 57.9% — ICU Level of Service B
Analysis Period (min) 15

Splits and Phases: 1: North Main Street & Progress Street & McDonald Street

Lane Group	SBT	SBR	SWL2	SWL	SWR2
Starvation Cap Reductn	0			0	
Spillback Cap Reductn	0			0	
Storage Cap Reductn	0			0	
Reduced v/c Ratio	0.25			0.01	

Intersection Summary

Lane Group	EBL2	EBL	EBT	EBR	WBL	WBT	WBR	WBR2	NBL	NBT	NBR	NBR2
Lane Configurations												
Traffic Volume (vph)	38	1	42	143	29	58	61	2	76	578	9	14
Future Volume (vph)	38	1	42	143	29	58	61	2	76	578	9	14
Ideal Flow (vphpl)	1900	1900	1900	1900	1900	1900	1900	1900	1900	1900	1900	1900
Lane Util. Factor	1.00	1.00	1.00	1.00	1.00	1.00	1.00	1.00	0.95	0.95	0.95	0.95
Frt			0.885			0.944				0.995		
Flt Protected	0.950					0.990				0.994		
Satd. Flow (prot)	1770	0	1649	0	0	1741	0	0	0	3500	0	0
Flt Permitted	0.637		0.998			0.892				0.784		
Satd. Flow (perm)	1187	0	1645	0	0	1569	0	0	0	2761	0	0
Right Turn on Red				Yes				No				No
Satd. Flow (RTOR)			143									
Link Speed (mph)			25			25				35		
Link Distance (ft)			1700			1433				1490		
Travel Time (s)			46.4			39.1				29.0		
Peak Hour Factor	0.92	0.92	0.92	0.92	0.92	0.92	0.92	0.92	0.92	0.92	0.92	0.92
Adj. Flow (vph)	41	1	46	155	32	63	66	2	83	628	10	15
Shared Lane Traffic (%)												
Lane Group Flow (vph)	41	0	202	0	0	163	0	0	0	736	0	0
Turn Type	Perm	Perm	NA		Perm	NA			pm+pt	NA		
Protected Phases			3			3			5	2		
Permitted Phases	3	3			3				2			
Detector Phase	3	3	3		3	3			5	2		
Switch Phase												
Minimum Initial (s)	8.0	8.0	8.0		8.0	8.0			5.0	15.0		
Minimum Split (s)	15.0	15.0	15.0		15.0	15.0			14.0	40.0		
Total Split (s)	16.0	16.0	16.0		16.0	16.0			14.0	54.0		
Total Split (%)	16.8%	16.8%	16.8%		16.8%	16.8%			14.7%	56.8%		
Yellow Time (s)	3.9	3.9	3.9		3.9	3.9			3.4	3.4		
All-Red Time (s)	3.1	3.1	3.1		3.1	3.1			5.0	5.0		
Lost Time Adjust (s)	-3.0		-3.0			-3.0				-4.4		
Total Lost Time (s)	4.0		4.0			4.0				4.0		
Lead/Lag	Lead	Lead	Lead		Lead	Lead			Lead			
Lead-Lag Optimize?	Yes	Yes	Yes		Yes	Yes			Yes			
Recall Mode	None	None	None		None	None			None	Min		
Act Effct Green (s)	12.7		12.7			12.7				27.1		
Actuated g/C Ratio	0.25		0.25			0.25				0.54		
v/c Ratio	0.14		0.39			0.41				0.50		
Control Delay	22.0		10.9			25.0				9.0		
Queue Delay	0.0		0.0			0.0				0.0		
Total Delay	22.0		10.9			25.0				9.0		
LOS	C		B			C				A		
Approach Delay			12.8			25.0				9.0		
Approach LOS			B			C				A		
Queue Length 50th (ft)	8		11			32				51		
Queue Length 95th (ft)	45		84			#151				153		
Internal Link Dist (ft)			1620			1353				1410		
Turn Bay Length (ft)												
Base Capacity (vph)	299		522			395				2544		

Lane Group	SBL2	SBL	SBT	SBR	SWL2	SWL	SWR2
Lane Configurations							
Traffic Volume (vph)	2	39	626	28	1	11	7
Future Volume (vph)	2	39	626	28	1	11	7
Ideal Flow (vphpl)	1900	1900	1900	1900	1900	1900	1900
Lane Util. Factor	0.95	0.95	0.95	0.95	1.00	1.00	1.00
Frt			0.994			0.949	
Flt Protected			0.997			0.970	
Satd. Flow (prot)	0	0	3507	0	0	1715	0
Flt Permitted			0.874			0.970	
Satd. Flow (perm)	0	0	3075	0	0	1715	0
Right Turn on Red				Yes			No
Satd. Flow (RTOR)			5				
Link Speed (mph)			35			30	
Link Distance (ft)			399			1152	
Travel Time (s)			7.8			26.2	
Peak Hour Factor	0.92	0.92	0.92	0.92	0.92	0.92	0.92
Adj. Flow (vph)	2	42	680	30	1	12	8
Shared Lane Traffic (%)							
Lane Group Flow (vph)	0	0	754	0	0	21	0
Turn Type	Perm	Perm	NA		Prot	Prot	
Protected Phases			6		4	4	
Permitted Phases	6	6					
Detector Phase	6	6	6		4	4	
Switch Phase							
Minimum Initial (s)	15.0	15.0	15.0		5.0	5.0	
Minimum Split (s)	40.0	40.0	40.0		25.0	25.0	
Total Split (s)	40.0	40.0	40.0		25.0	25.0	
Total Split (%)	42.1%	42.1%	42.1%		26.3%	26.3%	
Yellow Time (s)	3.4	3.4	3.4		3.4	3.4	
All-Red Time (s)	5.0	5.0	5.0		3.9	3.9	
Lost Time Adjust (s)			-4.4			-3.3	
Total Lost Time (s)			4.0			4.0	
Lead/Lag	Lag	Lag	Lag		Lag	Lag	
Lead-Lag Optimize?	Yes	Yes	Yes		Yes	Yes	
Recall Mode	Min	Min	Min		None	None	
Act Effct Green (s)			27.1			10.1	
Actuated g/C Ratio			0.54			0.20	
v/c Ratio			0.45			0.06	
Control Delay			8.4			22.5	
Queue Delay			0.0			0.0	
Total Delay			8.4			22.5	
LOS			A			C	
Approach Delay			8.4			22.5	
Approach LOS			A			C	
Queue Length 50th (ft)			50			4	
Queue Length 95th (ft)			148			28	
Internal Link Dist (ft)			319			1072	
Turn Bay Length (ft)							
Base Capacity (vph)			2361			757	

Lane Group	EBL2	EBL	EBT	EBR	WBL	WBT	WBR	WBR2	NBL	NBT	NBR	NBR2
Starvation Cap Reductn	0		0			0				0		
Spillback Cap Reductn	0		0			0				0		
Storage Cap Reductn	0		0			0				0		
Reduced v/c Ratio	0.14		0.39			0.41				0.29		

Intersection Summary

Area Type: Other
Cycle Length: 95
Actuated Cycle Length: 50.4
Natural Cycle: 95
Control Type: Actuated-Uncoordinated
Maximum v/c Ratio: 0.50
Intersection Signal Delay: 10.8 Intersection LOS: B
Intersection Capacity Utilization 78.7% ICU Level of Service D
Analysis Period (min) 15
95th percentile volume exceeds capacity, queue may be longer.
Queue shown is maximum after two cycles.

Splits and Phases: 1: North Main Street & Progress Street & McDonald Street

Lane Group	SBL2	SBL	SBT	SBR	SWL2	SWL	SWR2
Starvation Cap Reductn			0			0	
Spillback Cap Reductn			0			0	
Storage Cap Reductn			0			0	
Reduced v/c Ratio			0.32			0.03	

Intersection Summary

Lane Group	EBL2	EBT	EBR	WBL	WBT	WBR	WBR2	NBL	NBT	NBR	NBR2	SBL
Lane Configurations												
Traffic Volume (vph)	11	13	89	13	10	24	1	33	288	4	10	23
Future Volume (vph)	11	13	89	13	10	24	1	33	288	4	10	23
Ideal Flow (vphpl)	1900	1900	1900	1900	1900	1900	1900	1900	1900	1900	1900	1900
Lane Util. Factor	1.00	1.00	1.00	1.00	1.00	1.00	1.00	0.95	0.95	0.95	0.95	0.95
Frt		0.869			0.930				0.994			
Flt Protected	0.950				0.987				0.995			
Satd. Flow (prot)	1770	1619	0	0	1710	0	0	0	3500	0	0	0
Flt Permitted	0.723				0.882				0.845			
Satd. Flow (perm)	1347	1619	0	0	1528	0	0	0	2973	0	0	0
Right Turn on Red			Yes				No				No	
Satd. Flow (RTOR)		97										
Link Speed (mph)		25			25				35			
Link Distance (ft)		1700			1433				1490			
Travel Time (s)		46.4			39.1				29.0			
Peak Hour Factor	0.92	0.92	0.92	0.92	0.92	0.92	0.92	0.92	0.92	0.92	0.92	0.92
Adj. Flow (vph)	12	14	97	14	11	26	1	36	313	4	11	25
Shared Lane Traffic (%)												
Lane Group Flow (vph)	12	111	0	0	52	0	0	0	364	0	0	0
Turn Type	Perm	NA		Perm	NA			pm+pt	NA			Perm
Protected Phases		3			3			5	2			
Permitted Phases	3			3				2				6
Detector Phase	3	3		3	3			5	2			6
Switch Phase												
Minimum Initial (s)	8.0	8.0		8.0	8.0			5.0	15.0			15.0
Minimum Split (s)	15.0	15.0		15.0	15.0			14.0	40.0			40.0
Total Split (s)	15.0	15.0		15.0	15.0			14.0	55.0			41.0
Total Split (%)	15.8%	15.8%		15.8%	15.8%			14.7%	57.9%			43.2%
Yellow Time (s)	3.9	3.9		3.9	3.9			3.4	3.4			3.4
All-Red Time (s)	3.1	3.1		3.1	3.1			5.0	5.0			5.0
Lost Time Adjust (s)	-3.0	-3.0			-3.0				-4.4			
Total Lost Time (s)	4.0	4.0			4.0				4.0			
Lead/Lag	Lead	Lead		Lead	Lead			Lead				Lag
Lead-Lag Optimize?	Yes	Yes		Yes	Yes			Yes				Yes
Recall Mode	None	None		None	None			None	Min			Min
Act Effct Green (s)	11.4	11.4			11.4				26.0			
Actuated g/C Ratio	0.26	0.26			0.26				0.60			
v/c Ratio	0.03	0.22			0.13				0.20			
Control Delay	16.6	7.5			16.7				6.9			
Queue Delay	0.0	0.0			0.0				0.0			
Total Delay	16.6	7.5			16.7				6.9			
LOS	B	A			B				A			
Approach Delay		8.4			16.7				6.9			
Approach LOS		A			B				A			
Queue Length 50th (ft)	2	2			8				20			
Queue Length 95th (ft)	16	42			44				66			
Internal Link Dist (ft)		1620			1353				1410			
Turn Bay Length (ft)												
Base Capacity (vph)	353	496			401				2864			

Lane Group	SBT	SBR	SWL2	SWL	SWR2
Lane Configurations					
Traffic Volume (vph)	632	20	1	9	1
Future Volume (vph)	632	20	1	9	1
Ideal Flow (vphpl)	1900	1900	1900	1900	1900
Lane Util. Factor	0.95	0.95	1.00	1.00	1.00
Frt	0.996			0.989	
Flt Protected	0.998			0.956	
Satd. Flow (prot)	3518	0	0	1761	0
Flt Permitted	0.933			0.956	
Satd. Flow (perm)	3289	0	0	1761	0
Right Turn on Red		Yes			No
Satd. Flow (RTOR)	4				
Link Speed (mph)	35			30	
Link Distance (ft)	399			1152	
Travel Time (s)	7.8			26.2	
Peak Hour Factor	0.92	0.92	0.92	0.92	0.92
Adj. Flow (vph)	687	22	1	10	1
Shared Lane Traffic (%)					
Lane Group Flow (vph)	734	0	0	12	0
Turn Type	NA		Prot	Prot	
Protected Phases	6		4	4	
Permitted Phases					
Detector Phase	6		4	4	
Switch Phase					
Minimum Initial (s)	15.0		5.0	5.0	
Minimum Split (s)	40.0		25.0	25.0	
Total Split (s)	41.0		25.0	25.0	
Total Split (%)	43.2%		26.3%	26.3%	
Yellow Time (s)	3.4		3.4	3.4	
All-Red Time (s)	5.0		3.9	3.9	
Lost Time Adjust (s)	-4.4			-3.3	
Total Lost Time (s)	4.0			4.0	
Lead/Lag	Lag		Lag	Lag	
Lead-Lag Optimize?	Yes		Yes	Yes	
Recall Mode	Min		None	None	
Act Effct Green (s)	26.0			9.5	
Actuated g/C Ratio	0.60			0.22	
v/c Ratio	0.37			0.03	
Control Delay	7.7			17.5	
Queue Delay	0.0			0.0	
Total Delay	7.7			17.5	
LOS	A			B	
Approach Delay	7.7			17.5	
Approach LOS	A			B	
Queue Length 50th (ft)	44			2	
Queue Length 95th (ft)	135			17	
Internal Link Dist (ft)	319			1072	
Turn Bay Length (ft)					
Base Capacity (vph)	2908			883	

Lane Group	EBL2	EBT	EBR	WBL	WBT	WBR	WBR2	NBL	NBT	NBR	NBR2	SBL
Starvation Cap Reductn	0	0			0				0			
Spillback Cap Reductn	0	0			0				0			
Storage Cap Reductn	0	0			0				0			
Reduced v/c Ratio	0.03	0.22			0.13				0.13			

Intersection Summary

Area Type: Other
Cycle Length: 95
Actuated Cycle Length: 43.4
Natural Cycle: 95
Control Type: Actuated-Uncoordinated
Maximum v/c Ratio: 0.37
Intersection Signal Delay: 8.0 — Intersection LOS: A
Intersection Capacity Utilization 58.2% — ICU Level of Service B
Analysis Period (min) 15

Splits and Phases: 1: North Main Street & Progress Street & McDonald Street

Lane Group	SBT	SBR	SWL2	SWL	SWR2
Starvation Cap Reductn	0			0	
Spillback Cap Reductn	0			0	
Storage Cap Reductn	0			0	
Reduced v/c Ratio	0.25			0.01	

Intersection Summary

Lane Group	EBL2	EBL	EBT	EBR	WBL	WBT	WBR	WBR2	NBL	NBT	NBR	NBR2
Lane Configurations												
Traffic Volume (vph)	38	1	42	144	29	59	62	2	77	590	9	14
Future Volume (vph)	38	1	42	144	29	59	62	2	77	590	9	14
Ideal Flow (vphpl)	1900	1900	1900	1900	1900	1900	1900	1900	1900	1900	1900	1900
Lane Util. Factor	1.00	1.00	1.00	1.00	1.00	1.00	1.00	1.00	0.95	0.95	0.95	0.95
Frt			0.885			0.944				0.995		
Flt Protected	0.950					0.990				0.994		
Satd. Flow (prot)	1770	0	1649	0	0	1741	0	0	0	3500	0	0
Flt Permitted	0.623		0.998			0.877				0.773		
Satd. Flow (perm)	1160	0	1645	0	0	1542	0	0	0	2722	0	0
Right Turn on Red				Yes				No				No
Satd. Flow (RTOR)			145									
Link Speed (mph)			25			25				35		
Link Distance (ft)			1700			1433				1490		
Travel Time (s)			46.4			39.1				29.0		
Peak Hour Factor	0.92	0.92	0.92	0.92	0.92	0.92	0.92	0.92	0.92	0.92	0.92	0.92
Adj. Flow (vph)	41	1	46	157	32	64	67	2	84	641	10	15
Shared Lane Traffic (%)												
Lane Group Flow (vph)	41	0	204	0	0	165	0	0	0	750	0	0
Turn Type	Perm	Perm	NA		Perm	NA			pm+pt	NA		
Protected Phases			3			3			5	2		
Permitted Phases	3	3			3				2			
Detector Phase	3	3	3		3	3			5	2		
Switch Phase												
Minimum Initial (s)	8.0	8.0	8.0		8.0	8.0			5.0	15.0		
Minimum Split (s)	15.0	15.0	15.0		15.0	15.0			14.0	40.0		
Total Split (s)	16.0	16.0	16.0		16.0	16.0			14.0	54.0		
Total Split (%)	16.8%	16.8%	16.8%		16.8%	16.8%			14.7%	56.8%		
Yellow Time (s)	3.9	3.9	3.9		3.9	3.9			3.4	3.4		
All-Red Time (s)	3.1	3.1	3.1		3.1	3.1			5.0	5.0		
Lost Time Adjust (s)	-3.0		-3.0			-3.0				-4.4		
Total Lost Time (s)	4.0		4.0			4.0				4.0		
Lead/Lag	Lead	Lead	Lead		Lead	Lead			Lead			
Lead-Lag Optimize?	Yes	Yes	Yes		Yes	Yes			Yes			
Recall Mode	None	None	None		None	None			None	Min		
Act Effct Green (s)	12.9		12.9			12.9				27.8		
Actuated g/C Ratio	0.24		0.24			0.24				0.52		
v/c Ratio	0.15		0.40			0.45				0.53		
Control Delay	24.9		12.1			28.7				11.0		
Queue Delay	0.0		0.0			0.0				0.0		
Total Delay	24.9		12.1			28.7				11.0		
LOS	C		B			C				B		
Approach Delay			14.2			28.7				11.0		
Approach LOS			B			C				B		
Queue Length 50th (ft)	8		11			33				53		
Queue Length 95th (ft)	45		86			#159				157		
Internal Link Dist (ft)			1620			1353				1410		
Turn Bay Length (ft)												
Base Capacity (vph)	279		506			370				2389		

Lane Group	SBL2	SBL	SBT	SBR	SWL2	SWL	SWR2
Lane Configurations							
Traffic Volume (vph)	2	39	638	28	1	11	7
Future Volume (vph)	2	39	638	28	1	11	7
Ideal Flow (vphpl)	1900	1900	1900	1900	1900	1900	1900
Lane Util. Factor	0.95	0.95	0.95	0.95	1.00	1.00	1.00
Frt			0.994			0.949	
Flt Protected			0.997			0.970	
Satd. Flow (prot)	0	0	3507	0	0	1715	0
Flt Permitted			0.873			0.970	
Satd. Flow (perm)	0	0	3071	0	0	1715	0
Right Turn on Red				Yes			No
Satd. Flow (RTOR)			5				
Link Speed (mph)			35			30	
Link Distance (ft)			399			1152	
Travel Time (s)			7.8			26.2	
Peak Hour Factor	0.92	0.92	0.92	0.92	0.92	0.92	0.92
Adj. Flow (vph)	2	42	693	30	1	12	8
Shared Lane Traffic (%)							
Lane Group Flow (vph)	0	0	767	0	0	21	0
Turn Type	Perm	Perm	NA		Prot	Prot	
Protected Phases			6		4	4	
Permitted Phases	6	6					
Detector Phase	6	6	6		4	4	
Switch Phase							
Minimum Initial (s)	15.0	15.0	15.0		5.0	5.0	
Minimum Split (s)	40.0	40.0	40.0		25.0	25.0	
Total Split (s)	40.0	40.0	40.0		25.0	25.0	
Total Split (%)	42.1%	42.1%	42.1%		26.3%	26.3%	
Yellow Time (s)	3.4	3.4	3.4		3.4	3.4	
All-Red Time (s)	5.0	5.0	5.0		3.9	3.9	
Lost Time Adjust (s)			-4.4			-3.3	
Total Lost Time (s)			4.0			4.0	
Lead/Lag	Lag	Lag	Lag		Lag	Lag	
Lead-Lag Optimize?	Yes	Yes	Yes		Yes	Yes	
Recall Mode	Min	Min	Min		None	None	
Act Effct Green (s)			27.8			10.3	
Actuated g/C Ratio			0.52			0.19	
v/c Ratio			0.48			0.06	
Control Delay			10.1			25.4	
Queue Delay			0.0			0.0	
Total Delay			10.1			25.4	
LOS			B			C	
Approach Delay			10.1			25.4	
Approach LOS			B			C	
Queue Length 50th (ft)			52			4	
Queue Length 95th (ft)			152			28	
Internal Link Dist (ft)			319			1072	
Turn Bay Length (ft)							
Base Capacity (vph)			2259			722	

Lane Group	EBL2	EBL	EBT	EBR	WBL	WBT	WBR	WBR2	NBL	NBT	NBR	NBR2
Starvation Cap Reductn	0		0			0				0		
Spillback Cap Reductn	0		0			0				0		
Storage Cap Reductn	0		0			0				0		
Reduced v/c Ratio	0.15		0.40			0.45				0.31		

Intersection Summary

Area Type: Other
Cycle Length: 95
Actuated Cycle Length: 53.8
Natural Cycle: 95
Control Type: Actuated-Uncoordinated
Maximum v/c Ratio: 0.53
Intersection Signal Delay: 12.7 Intersection LOS: B
Intersection Capacity Utilization 79.6% ICU Level of Service D
Analysis Period (min) 15
95th percentile volume exceeds capacity, queue may be longer.
Queue shown is maximum after two cycles.

Splits and Phases: 1: North Main Street & Progress Street & McDonald Street

Lane Group	SBL2	SBL	SBT	SBR	SWL2	SWL	SWR2
Starvation Cap Reductn			0			0	
Spillback Cap Reductn			0			0	
Storage Cap Reductn			0			0	
Reduced v/c Ratio			0.34			0.03	

Intersection Summary

Lane Group	EBL2	EBT	EBR	WBL	WBT	WBR	WBR2	NBL	NBT	NBR	NBR2	SBL
Lane Configurations												
Traffic Volume (vph)	16	13	89	13	10	26	1	33	319	4	10	30
Future Volume (vph)	16	13	89	13	10	26	1	33	319	4	10	30
Ideal Flow (vphpl)	1900	1900	1900	1900	1900	1900	1900	1900	1900	1900	1900	1900
Lane Util. Factor	1.00	1.00	1.00	1.00	1.00	1.00	1.00	0.95	0.95	0.95	0.95	0.95
Frt		0.869			0.927				0.994			
Flt Protected	0.950				0.987				0.995			
Satd. Flow (prot)	1770	1619	0	0	1704	0	0	0	3500	0	0	0
Flt Permitted	0.722				0.885				0.840			
Satd. Flow (perm)	1345	1619	0	0	1528	0	0	0	2955	0	0	0
Right Turn on Red			Yes				No				No	
Satd. Flow (RTOR)		97										
Link Speed (mph)		25			25				35			
Link Distance (ft)		1700			1433				1490			
Travel Time (s)		46.4			39.1				29.0			
Peak Hour Factor	0.92	0.92	0.92	0.92	0.92	0.92	0.92	0.92	0.92	0.92	0.92	0.92
Adj. Flow (vph)	17	14	97	14	11	28	1	36	347	4	11	33
Shared Lane Traffic (%)												
Lane Group Flow (vph)	17	111	0	0	54	0	0	0	398	0	0	0
Turn Type	Perm	NA		Perm	NA			pm+pt	NA			Perm
Protected Phases		3			3			5	2			
Permitted Phases	3			3				2				6
Detector Phase	3	3		3	3			5	2			6
Switch Phase												
Minimum Initial (s)	8.0	8.0		8.0	8.0			5.0	15.0			15.0
Minimum Split (s)	15.0	15.0		15.0	15.0			14.0	40.0			40.0
Total Split (s)	15.0	15.0		15.0	15.0			14.0	55.0			41.0
Total Split (%)	15.8%	15.8%		15.8%	15.8%			14.7%	57.9%			43.2%
Yellow Time (s)	3.9	3.9		3.9	3.9			3.4	3.4			3.4
All-Red Time (s)	3.1	3.1		3.1	3.1			5.0	5.0			5.0
Lost Time Adjust (s)	-3.0	-3.0			-3.0				-4.4			
Total Lost Time (s)	4.0	4.0			4.0				4.0			
Lead/Lag	Lead	Lead		Lead	Lead			Lead				Lag
Lead-Lag Optimize?	Yes	Yes		Yes	Yes			Yes				Yes
Recall Mode	None	None		None	None			None	Min			Min
Act Effct Green (s)	11.5	11.5			11.5				28.2			
Actuated g/C Ratio	0.25	0.25			0.25				0.62			
v/c Ratio	0.05	0.23			0.14				0.22			
Control Delay	18.4	8.1			18.4				6.5			
Queue Delay	0.0	0.0			0.0				0.0			
Total Delay	18.4	8.1			18.4				6.5			
LOS	B	A			B				A			
Approach Delay		9.5			18.4				6.5			
Approach LOS		A			B				A			
Queue Length 50th (ft)	3	2			9				22			
Queue Length 95th (ft)	22	44			49				71			
Internal Link Dist (ft)		1620			1353				1410			
Turn Bay Length (ft)												
Base Capacity (vph)	339	481			386				2814			

Lane Group	SBT	SBR	SWL2	SWL	SWR2
Lane Configurations					
Traffic Volume (vph)	700	47	1	9	1
Future Volume (vph)	700	47	1	9	1
Ideal Flow (vphpl)	1900	1900	1900	1900	1900
Lane Util. Factor	0.95	0.95	1.00	1.00	1.00
Frt	0.991			0.989	
Flt Protected	0.998			0.956	
Satd. Flow (prot)	3500	0	0	1761	0
Flt Permitted	0.926			0.956	
Satd. Flow (perm)	3248	0	0	1761	0
Right Turn on Red		Yes			No
Satd. Flow (RTOR)	8				
Link Speed (mph)	35			30	
Link Distance (ft)	399			1152	
Travel Time (s)	7.8			26.2	
Peak Hour Factor	0.92	0.92	0.92	0.92	0.92
Adj. Flow (vph)	761	51	1	10	1
Shared Lane Traffic (%)					
Lane Group Flow (vph)	845	0	0	12	0
Turn Type	NA		Prot	Prot	
Protected Phases	6		4	4	
Permitted Phases					
Detector Phase	6		4	4	
Switch Phase					
Minimum Initial (s)	15.0		5.0	5.0	
Minimum Split (s)	40.0		25.0	25.0	
Total Split (s)	41.0		25.0	25.0	
Total Split (%)	43.2%		26.3%	26.3%	
Yellow Time (s)	3.4		3.4	3.4	
All-Red Time (s)	5.0		3.9	3.9	
Lost Time Adjust (s)	-4.4			-3.3	
Total Lost Time (s)	4.0			4.0	
Lead/Lag	Lag		Lag	Lag	
Lead-Lag Optimize?	Yes		Yes	Yes	
Recall Mode	Min		None	None	
Act Effct Green (s)	28.2			9.6	
Actuated g/C Ratio	0.62			0.21	
v/c Ratio	0.42			0.03	
Control Delay	7.6			19.2	
Queue Delay	0.0			0.0	
Total Delay	7.6			19.2	
LOS	A			B	
Approach Delay	7.6			19.2	
Approach LOS	A			B	
Queue Length 50th (ft)	53			2	
Queue Length 95th (ft)	158			18	
Internal Link Dist (ft)	319			1072	
Turn Bay Length (ft)					
Base Capacity (vph)	2763			850	

Lane Group	EBL2	EBT	EBR	WBL	WBT	WBR	WBR2	NBL	NBT	NBR	NBR2	SBL
Starvation Cap Reductn	0	0			0				0			
Spillback Cap Reductn	0	0			0				0			
Storage Cap Reductn	0	0			0				0			
Reduced v/c Ratio	0.05	0.23			0.14				0.14			

Intersection Summary

Area Type: Other
Cycle Length: 95
Actuated Cycle Length: 45.5
Natural Cycle: 95
Control Type: Actuated-Uncoordinated
Maximum v/c Ratio: 0.42
Intersection Signal Delay: 8.0 — Intersection LOS: A
Intersection Capacity Utilization 61.3% — ICU Level of Service B
Analysis Period (min) 15

Splits and Phases: 1: North Main Street & Progress Street & McDonald Street

Lane Group	SBT	SBR	SWL2	SWL	SWR2
Starvation Cap Reductn	0			0	
Spillback Cap Reductn	0			0	
Storage Cap Reductn	0			0	
Reduced v/c Ratio	0.31			0.01	

Intersection Summary

Lane Group	EBL2	EBL	EBT	EBR	WBL	WBT	WBR	WBR2	NBL	NBT	NBR	NBR2
Lane Configurations												
Traffic Volume (vph)	46	1	42	144	29	59	64	2	77	686	9	14
Future Volume (vph)	46	1	42	144	29	59	64	2	77	686	9	14
Ideal Flow (vphpl)	1900	1900	1900	1900	1900	1900	1900	1900	1900	1900	1900	1900
Lane Util. Factor	1.00	1.00	1.00	1.00	1.00	1.00	1.00	1.00	0.95	0.95	0.95	0.95
Frt			0.885			0.942				0.996		
Flt Protected	0.950					0.991				0.995		
Satd. Flow (prot)	1770	0	1649	0	0	1739	0	0	0	3507	0	0
Flt Permitted	0.591		0.999			0.905				0.729		
Satd. Flow (perm)	1101	0	1647	0	0	1588	0	0	0	2570	0	0
Right Turn on Red				Yes				No				No
Satd. Flow (RTOR)			143									
Link Speed (mph)			25			25				35		
Link Distance (ft)			1700			1433				1490		
Travel Time (s)			46.4			39.1				29.0		
Peak Hour Factor	0.92	0.92	0.92	0.92	0.92	0.92	0.92	0.92	0.92	0.92	0.92	0.92
Adj. Flow (vph)	50	1	46	157	32	64	70	2	84	746	10	15
Shared Lane Traffic (%)												
Lane Group Flow (vph)	50	0	204	0	0	168	0	0	0	855	0	0
Turn Type	Perm	Perm	NA		Perm	NA			pm+pt	NA		
Protected Phases			3			3			5	2		
Permitted Phases	3	3			3				2			
Detector Phase	3	3	3		3	3			5	2		
Switch Phase												
Minimum Initial (s)	8.0	8.0	8.0		8.0	8.0			5.0	15.0		
Minimum Split (s)	15.0	15.0	15.0		15.0	15.0			14.0	40.0		
Total Split (s)	20.0	20.0	20.0		20.0	20.0			14.0	55.0		
Total Split (%)	20.0%	20.0%	20.0%		20.0%	20.0%			14.0%	55.0%		
Yellow Time (s)	3.9	3.9	3.9		3.9	3.9			3.4	3.4		
All-Red Time (s)	3.1	3.1	3.1		3.1	3.1			5.0	5.0		
Lost Time Adjust (s)	-3.0		-3.0			-3.0				-4.4		
Total Lost Time (s)	4.0		4.0			4.0				4.0		
Lead/Lag	Lead	Lead	Lead		Lead	Lead			Lead			
Lead-Lag Optimize?	Yes	Yes	Yes		Yes	Yes			Yes			
Recall Mode	None	None	None		None	None			None	Min		
Act Effct Green (s)	17.2		17.2			17.2				36.2		
Actuated g/C Ratio	0.26		0.26			0.26				0.54		
v/c Ratio	0.18		0.38			0.41				0.61		
Control Delay	28.9		12.9			30.3				13.0		
Queue Delay	0.0		0.0			0.0				0.0		
Total Delay	28.9		12.9			30.3				13.0		
LOS	C		B			C				B		
Approach Delay			16.1			30.3				13.0		
Approach LOS			B			C				B		
Queue Length 50th (ft)	13		15			45				84		
Queue Length 95th (ft)	59		95			157				215		
Internal Link Dist (ft)			1620			1353				1410		
Turn Bay Length (ft)												
Base Capacity (vph)	284		531			410				2074		

Lane Group	SBL2	SBL	SBT	SBR	SWL2	SWL	SWR2
Lane Configurations							
Traffic Volume (vph)	2	52	720	84	1	11	7
Future Volume (vph)	2	52	720	84	1	11	7
Ideal Flow (vphpl)	1900	1900	1900	1900	1900	1900	1900
Lane Util. Factor	0.95	0.95	0.95	0.95	1.00	1.00	1.00
Frt			0.985			0.949	
Flt Protected			0.997			0.970	
Satd. Flow (prot)	0	0	3476	0	0	1715	0
Flt Permitted			0.840			0.970	
Satd. Flow (perm)	0	0	2928	0	0	1715	0
Right Turn on Red				Yes			No
Satd. Flow (RTOR)			13				
Link Speed (mph)			35			30	
Link Distance (ft)			399			1152	
Travel Time (s)			7.8			26.2	
Peak Hour Factor	0.92	0.92	0.92	0.92	0.92	0.92	0.92
Adj. Flow (vph)	2	57	783	91	1	12	8
Shared Lane Traffic (%)							
Lane Group Flow (vph)	0	0	933	0	0	21	0
Turn Type	Perm	Perm	NA		Prot	Prot	
Protected Phases			6		4	4	
Permitted Phases	6	6					
Detector Phase	6	6	6		4	4	
Switch Phase							
Minimum Initial (s)	15.0	15.0	15.0		5.0	5.0	
Minimum Split (s)	40.0	40.0	40.0		25.0	25.0	
Total Split (s)	41.0	41.0	41.0		25.0	25.0	
Total Split (%)	41.0%	41.0%	41.0%		25.0%	25.0%	
Yellow Time (s)	3.4	3.4	3.4		3.4	3.4	
All-Red Time (s)	5.0	5.0	5.0		3.9	3.9	
Lost Time Adjust (s)			-4.4			-3.3	
Total Lost Time (s)			4.0			4.0	
Lead/Lag	Lag	Lag	Lag		Lag	Lag	
Lead-Lag Optimize?	Yes	Yes	Yes		Yes	Yes	
Recall Mode	Min	Min	Min		None	None	
Act Effct Green (s)			36.2			10.4	
Actuated g/C Ratio			0.54			0.16	
v/c Ratio			0.58			0.08	
Control Delay			12.1			32.6	
Queue Delay			0.0			0.0	
Total Delay			12.1			32.6	
LOS			B			C	
Approach Delay			12.1			32.6	
Approach LOS			B			C	
Queue Length 50th (ft)			88			6	
Queue Length 95th (ft)			221			33	
Internal Link Dist (ft)			319			1072	
Turn Bay Length (ft)							
Base Capacity (vph)			1913			581	

Lane Group	EBL2	EBL	EBT	EBR	WBL	WBT	WBR	WBR2	NBL	NBT	NBR	NBR2
Starvation Cap Reductn	0		0			0				0		
Spillback Cap Reductn	0		0			0				0		
Storage Cap Reductn	0		0			0				0		
Reduced v/c Ratio	0.18		0.38			0.41				0.41		

Intersection Summary

Area Type: Other
Cycle Length: 100
Actuated Cycle Length: 66.5
Natural Cycle: 95
Control Type: Actuated-Uncoordinated
Maximum v/c Ratio: 0.61
Intersection Signal Delay: 14.4 — Intersection LOS: B
Intersection Capacity Utilization 86.8% — ICU Level of Service E
Analysis Period (min) 15

Splits and Phases: 1: North Main Street & Progress Street & McDonald Street

Lane Group	SBL2	SBL	SBT	SBR	SWL2	SWL	SWR2
Starvation Cap Reductn			0			0	
Spillback Cap Reductn			0			0	
Storage Cap Reductn			0			0	
Reduced v/c Ratio			0.49			0.04	

Intersection Summary

NORTH MAIN STREET

&

PATRICK HENRY DRIVE

Lane Group	EBL	EBT	EBR	WBL	WBT	WBR	NBL	NBT	NBR	SBL	SBT	SBR
Lane Configurations												
Traffic Volume (vph)	59	50	90	56	83	34	67	207	24	51	505	127
Future Volume (vph)	59	50	90	56	83	34	67	207	24	51	505	127
Ideal Flow (vphpl)	1900	1900	1900	1900	1900	1900	1900	1900	1900	1900	1900	1900
Storage Length (ft)	0		0	0		0	150		0	250		0
Storage Lanes	1		0	0		0	1		0	1		0
Taper Length (ft)	25			25			0			0		
Lane Util. Factor	1.00	1.00	1.00	0.95	0.95	0.95	1.00	0.95	0.95	1.00	0.95	0.95
Frt		0.903			0.970			0.984			0.970	
Flt Protected	0.950				0.984		0.950			0.950		
Satd. Flow (prot)	1770	1682	0	0	3378	0	1770	3483	0	1770	3433	0
Flt Permitted	0.950				0.984		0.262			0.596		
Satd. Flow (perm)	1770	1682	0	0	3378	0	488	3483	0	1110	3433	0
Right Turn on Red			Yes			Yes			Yes			Yes
Satd. Flow (RTOR)		81			27			12			30	
Link Speed (mph)		25			25			35			35	
Link Distance (ft)		2165			1661			2707			1986	
Travel Time (s)		59.0			45.3			52.7			38.7	
Peak Hour Factor	0.92	0.92	0.92	0.92	0.92	0.92	0.92	0.92	0.92	0.92	0.92	0.92
Adj. Flow (vph)	64	54	98	61	90	37	73	225	26	55	549	138
Shared Lane Traffic (%)												
Lane Group Flow (vph)	64	152	0	0	188	0	73	251	0	55	687	0
Turn Type	Split	NA		Split	NA		pm+pt	NA		pm+pt	NA	
Protected Phases	3	3		4	4		1	6		5	2	
Permitted Phases							6			2		
Detector Phase	3	3		4	4		1	6		5	2	
Switch Phase												
Minimum Initial (s)	8.0	8.0		8.0	8.0		5.0	15.0		5.0	15.0	
Minimum Split (s)	28.0	28.0		30.0	30.0		12.0	35.0		12.0	35.0	
Total Split (s)	28.0	28.0		30.0	30.0		12.0	35.0		12.0	35.0	
Total Split (%)	26.7%	26.7%		28.6%	28.6%		11.4%	33.3%		11.4%	33.3%	
Yellow Time (s)	3.1	3.1		3.0	3.0		4.4	4.4		4.4	4.4	
All-Red Time (s)	2.4	2.4		2.6	2.6		2.6	2.6		2.6	2.6	
Lost Time Adjust (s)	-1.5	-1.5			-1.6		-3.0	-3.0		-3.0	-3.0	
Total Lost Time (s)	4.0	4.0			4.0		4.0	4.0		4.0	4.0	
Lead/Lag	Lead	Lead		Lag	Lag		Lead	Lag		Lead	Lag	
Lead-Lag Optimize?	Yes	Yes		Yes	Yes		Yes	Yes		Yes	Yes	
Recall Mode	None	None		None	None		None	Min		None	Min	
Act Effct Green (s)	11.3	11.3			11.1		30.1	25.7		29.2	23.2	
Actuated g/C Ratio	0.17	0.17			0.17		0.45	0.38		0.44	0.35	
v/c Ratio	0.21	0.43			0.32		0.19	0.19		0.10	0.57	
Control Delay	29.1	19.0			25.2		10.8	15.1		9.9	20.1	
Queue Delay	0.0	0.0			0.0		0.0	0.0		0.0	0.0	
Total Delay	29.1	19.0			25.2		10.8	15.1		9.9	20.1	
LOS	C	B			C		B	B		A	C	
Approach Delay		22.0			25.2			14.1			19.3	
Approach LOS		C			C			B			B	
Queue Length 50th (ft)	23	26			31		14	36		11	115	
Queue Length 95th (ft)	63	86			70		39	70		32	192	

Lane Group	EBL	EBT	EBR	WBL	WBT	WBR	NBL	NBT	NBR	SBL	SBT	SBR
Internal Link Dist (ft)		2085			1581			2627			1906	
Turn Bay Length (ft)							150			250		
Base Capacity (vph)	653	672			1367		376	1672		564	1652	
Starvation Cap Reductn	0	0			0		0	0		0	0	
Spillback Cap Reductn	0	0			0		0	0		0	0	
Storage Cap Reductn	0	0			0		0	0		0	0	
Reduced v/c Ratio	0.10	0.23			0.14		0.19	0.15		0.10	0.42	

Intersection Summary

Area Type: Other
Cycle Length: 105
Actuated Cycle Length: 67.1
Natural Cycle: 105
Control Type: Actuated-Uncoordinated
Maximum v/c Ratio: 0.57
Intersection Signal Delay: 19.3 — Intersection LOS: B
Intersection Capacity Utilization 50.3% — ICU Level of Service A
Analysis Period (min) 15

Splits and Phases: 2: North Main Street & Patrick Henry Drive

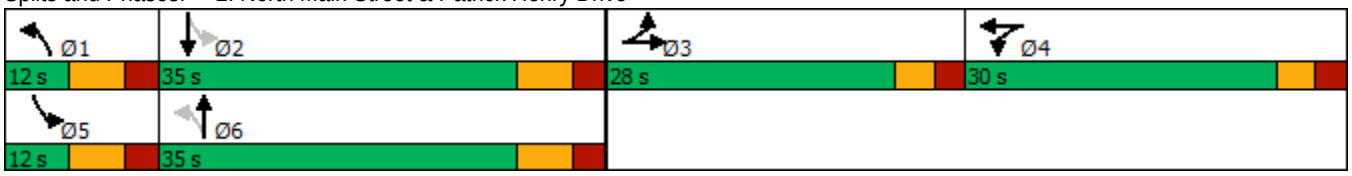

Lane Group	EBL	EBT	EBR	WBL	WBT	WBR	NBL	NBT	NBR	SBL	SBT	SBR
Lane Configurations												
Traffic Volume (vph)	101	141	190	81	148	43	157	432	68	77	402	131
Future Volume (vph)	101	141	190	81	148	43	157	432	68	77	402	131
Ideal Flow (vphpl)	1900	1900	1900	1900	1900	1900	1900	1900	1900	1900	1900	1900
Storage Length (ft)	0		0	0		0	150		0	250		0
Storage Lanes	1		0	0		0	1		0	1		0
Taper Length (ft)	25			25			0			0		
Lane Util. Factor	1.00	1.00	1.00	0.95	0.95	0.95	1.00	0.95	0.95	1.00	0.95	0.95
Frt		0.914			0.976			0.980			0.963	
Flt Protected	0.950				0.985		0.950			0.950		
Satd. Flow (prot)	1770	1703	0	0	3402	0	1770	3468	0	1770	3408	0
Flt Permitted	0.950				0.985		0.279			0.345		
Satd. Flow (perm)	1770	1703	0	0	3402	0	520	3468	0	643	3408	0
Right Turn on Red			Yes			Yes			Yes			Yes
Satd. Flow (RTOR)		60			20			17			42	
Link Speed (mph)		25			25			35			35	
Link Distance (ft)		2165			1661			2707			1986	
Travel Time (s)		59.0			45.3			52.7			38.7	
Peak Hour Factor	0.92	0.92	0.92	0.92	0.92	0.92	0.92	0.92	0.92	0.92	0.92	0.92
Adj. Flow (vph)	110	153	207	88	161	47	171	470	74	84	437	142
Shared Lane Traffic (%)												
Lane Group Flow (vph)	110	360	0	0	296	0	171	544	0	84	579	0
Turn Type	Split	NA		Split	NA		pm+pt	NA		pm+pt	NA	
Protected Phases	3	3		4	4		1	6		5	2	
Permitted Phases							6			2		
Detector Phase	3	3		4	4		1	6		5	2	
Switch Phase												
Minimum Initial (s)	8.0	8.0		8.0	8.0		5.0	15.0		5.0	15.0	
Minimum Split (s)	28.0	28.0		30.0	30.0		12.0	35.0		12.0	35.0	
Total Split (s)	28.0	28.0		30.0	30.0		12.0	35.0		12.0	35.0	
Total Split (%)	26.7%	26.7%		28.6%	28.6%		11.4%	33.3%		11.4%	33.3%	
Yellow Time (s)	3.1	3.1		3.0	3.0		4.4	4.4		4.4	4.4	
All-Red Time (s)	2.4	2.4		2.6	2.6		2.6	2.6		2.6	2.6	
Lost Time Adjust (s)	-1.5	-1.5			-1.6		-3.0	-3.0		-3.0	-3.0	
Total Lost Time (s)	4.0	4.0			4.0		4.0	4.0		4.0	4.0	
Lead/Lag	Lead	Lead		Lag	Lag		Lead	Lag		Lead	Lag	
Lead-Lag Optimize?	Yes	Yes		Yes	Yes		Yes	Yes		Yes	Yes	
Recall Mode	None	None		None	None		None	Min		None	Min	
Act Effct Green (s)	20.9	20.9			13.8		31.8	25.6		30.8	22.7	
Actuated g/C Ratio	0.26	0.26			0.17		0.39	0.31		0.38	0.28	
v/c Ratio	0.24	0.75			0.50		0.52	0.50		0.24	0.59	
Control Delay	27.4	35.5			32.9		22.9	25.9		17.5	27.1	
Queue Delay	0.0	0.0			0.0		0.0	0.0		0.0	0.0	
Total Delay	27.4	35.5			32.9		22.9	25.9		17.5	27.1	
LOS	C	D			C		C	C		B	C	
Approach Delay		33.6			32.9			25.2			25.9	
Approach LOS		C			C			C			C	
Queue Length 50th (ft)	44	140			70		58	127		27	131	
Queue Length 95th (ft)	100	#306			120		109	188		58	195	

Lane Group	EBL	EBT	EBR	WBL	WBT	WBR	NBL	NBT	NBR	SBL	SBT	SBR
Internal Link Dist (ft)		2085			1581			2627			1906	
Turn Bay Length (ft)							150			250		
Base Capacity (vph)	528	550			1114		326	1348		354	1340	
Starvation Cap Reductn	0	0			0		0	0		0	0	
Spillback Cap Reductn	0	0			0		0	0		0	0	
Storage Cap Reductn	0	0			0		0	0		0	0	
Reduced v/c Ratio	0.21	0.65			0.27		0.52	0.40		0.24	0.43	

Intersection Summary

Area Type: Other
Cycle Length: 105
Actuated Cycle Length: 81.8
Natural Cycle: 105
Control Type: Actuated-Uncoordinated
Maximum v/c Ratio: 0.75
Intersection Signal Delay: 28.3 Intersection LOS: C
Intersection Capacity Utilization 64.2% ICU Level of Service C
Analysis Period (min) 15
95th percentile volume exceeds capacity, queue may be longer.
Queue shown is maximum after two cycles.

Splits and Phases: 2: North Main Street & Patrick Henry Drive

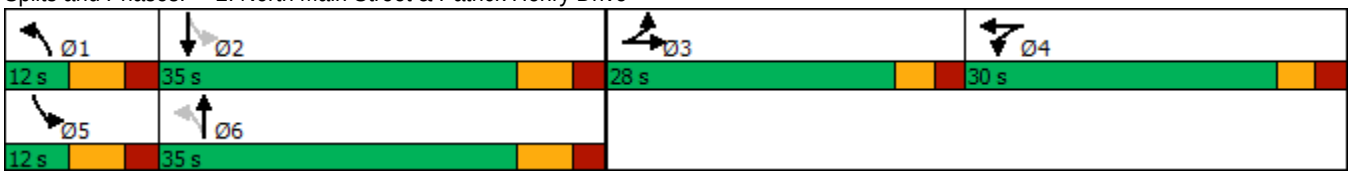

Lane Group	EBL	EBT	EBR	WBL	WBT	WBR	NBL	NBT	NBR	SBL	SBT	SBR
Lane Configurations												
Traffic Volume (vph)	61	53	98	57	84	34	70	209	24	52	510	128
Future Volume (vph)	61	53	98	57	84	34	70	209	24	52	510	128
Ideal Flow (vphpl)	1900	1900	1900	1900	1900	1900	1900	1900	1900	1900	1900	1900
Storage Length (ft)	0		0	0		0	150		0	250		0
Storage Lanes	1		0	0		0	1		0	1		0
Taper Length (ft)	25			25			0			0		
Lane Util. Factor	1.00	1.00	1.00	0.95	0.95	0.95	1.00	0.95	0.95	1.00	0.95	0.95
Frt		0.903			0.971			0.985			0.970	
Flt Protected	0.950				0.984		0.950			0.950		
Satd. Flow (prot)	1770	1682	0	0	3382	0	1770	3486	0	1770	3433	0
Flt Permitted	0.950				0.984		0.258			0.595		
Satd. Flow (perm)	1770	1682	0	0	3382	0	481	3486	0	1108	3433	0
Right Turn on Red			Yes			Yes			Yes			Yes
Satd. Flow (RTOR)		82			27			12			30	
Link Speed (mph)		25			25			35			35	
Link Distance (ft)		2165			1661			2707			1986	
Travel Time (s)		59.0			45.3			52.7			38.7	
Peak Hour Factor	0.92	0.92	0.92	0.92	0.92	0.92	0.92	0.92	0.92	0.92	0.92	0.92
Adj. Flow (vph)	66	58	107	62	91	37	76	227	26	57	554	139
Shared Lane Traffic (%)												
Lane Group Flow (vph)	66	165	0	0	190	0	76	253	0	57	693	0
Turn Type	Split	NA		Split	NA		pm+pt	NA		pm+pt	NA	
Protected Phases	3	3		4	4		1	6		5	2	
Permitted Phases							6			2		
Detector Phase	3	3		4	4		1	6		5	2	
Switch Phase												
Minimum Initial (s)	8.0	8.0		8.0	8.0		5.0	15.0		5.0	15.0	
Minimum Split (s)	28.0	28.0		30.0	30.0		12.0	35.0		12.0	35.0	
Total Split (s)	28.0	28.0		30.0	30.0		12.0	35.0		12.0	35.0	
Total Split (%)	26.7%	26.7%		28.6%	28.6%		11.4%	33.3%		11.4%	33.3%	
Yellow Time (s)	3.1	3.1		3.0	3.0		4.4	4.4		4.4	4.4	
All-Red Time (s)	2.4	2.4		2.6	2.6		2.6	2.6		2.6	2.6	
Lost Time Adjust (s)	-1.5	-1.5			-1.6		-3.0	-3.0		-3.0	-3.0	
Total Lost Time (s)	4.0	4.0			4.0		4.0	4.0		4.0	4.0	
Lead/Lag	Lead	Lead		Lag	Lag		Lead	Lag		Lead	Lag	
Lead-Lag Optimize?	Yes	Yes		Yes	Yes		Yes	Yes		Yes	Yes	
Recall Mode	None	None		None	None		None	Min		None	Min	
Act Effct Green (s)	11.8	11.8			11.2		30.5	26.1		29.6	23.5	
Actuated g/C Ratio	0.17	0.17			0.16		0.45	0.38		0.44	0.35	
v/c Ratio	0.22	0.46			0.33		0.20	0.19		0.10	0.57	
Control Delay	29.1	20.1			25.7		11.2	15.4		10.2	20.3	
Queue Delay	0.0	0.0			0.0		0.0	0.0		0.0	0.0	
Total Delay	29.1	20.1			25.7		11.2	15.4		10.2	20.3	
LOS	C	C			C		B	B		B	C	
Approach Delay		22.7			25.7			14.4			19.6	
Approach LOS		C			C			B			B	
Queue Length 50th (ft)	25	31			32		15	37		11	118	
Queue Length 95th (ft)	65	95			72		41	72		33	198	

Lane Group	EBL	EBT	EBR	WBL	WBT	WBR	NBL	NBT	NBR	SBL	SBT	SBR
Internal Link Dist (ft)		2085			1581			2627			1906	
Turn Bay Length (ft)							150			250		
Base Capacity (vph)	646	666			1354		372	1657		563	1635	
Starvation Cap Reductn	0	0			0		0	0		0	0	
Spillback Cap Reductn	0	0			0		0	0		0	0	
Storage Cap Reductn	0	0			0		0	0		0	0	
Reduced v/c Ratio	0.10	0.25			0.14		0.20	0.15		0.10	0.42	

Intersection Summary

Area Type: Other
Cycle Length: 105
Actuated Cycle Length: 68
Natural Cycle: 105
Control Type: Actuated-Uncoordinated
Maximum v/c Ratio: 0.57
Intersection Signal Delay: 19.7 — Intersection LOS: B
Intersection Capacity Utilization 51.2% — ICU Level of Service A
Analysis Period (min) 15

Splits and Phases: 2: North Main Street & Patrick Henry Drive

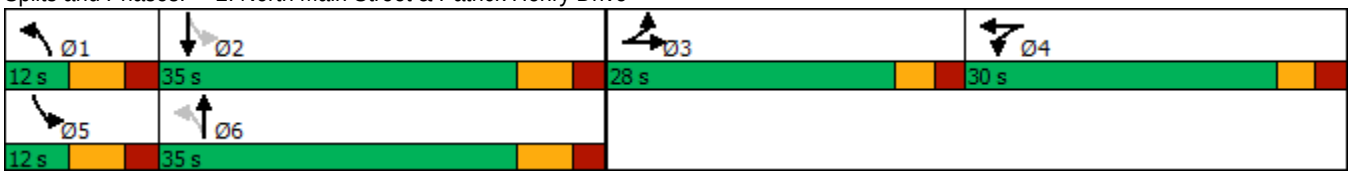

Lane Group	EBL	EBT	EBR	WBL	WBT	WBR	NBL	NBT	NBR	SBL	SBT	SBR
Lane Configurations												
Traffic Volume (vph)	103	145	198	82	149	43	165	436	69	78	406	134
Future Volume (vph)	103	145	198	82	149	43	165	436	69	78	406	134
Ideal Flow (vphpl)	1900	1900	1900	1900	1900	1900	1900	1900	1900	1900	1900	1900
Storage Length (ft)	0		0	0		0	150		0	250		0
Storage Lanes	1		0	0		0	1		0	1		0
Taper Length (ft)	25			25			0			0		
Lane Util. Factor	1.00	1.00	1.00	0.95	0.95	0.95	1.00	0.95	0.95	1.00	0.95	0.95
Frt		0.914			0.976			0.980			0.963	
Flt Protected	0.950				0.985		0.950			0.950		
Satd. Flow (prot)	1770	1703	0	0	3402	0	1770	3468	0	1770	3408	0
Flt Permitted	0.950				0.985		0.271			0.341		
Satd. Flow (perm)	1770	1703	0	0	3402	0	505	3468	0	635	3408	0
Right Turn on Red			Yes			Yes			Yes			Yes
Satd. Flow (RTOR)		60			19			17			44	
Link Speed (mph)		25			25			35			35	
Link Distance (ft)		2165			1661			2707			1986	
Travel Time (s)		59.0			45.3			52.7			38.7	
Peak Hour Factor	0.92	0.92	0.92	0.92	0.92	0.92	0.92	0.92	0.92	0.92	0.92	0.92
Adj. Flow (vph)	112	158	215	89	162	47	179	474	75	85	441	146
Shared Lane Traffic (%)												
Lane Group Flow (vph)	112	373	0	0	298	0	179	549	0	85	587	0
Turn Type	Split	NA		Split	NA		pm+pt	NA		pm+pt	NA	
Protected Phases	3	3		4	4		1	6		5	2	
Permitted Phases							6			2		
Detector Phase	3	3		4	4		1	6		5	2	
Switch Phase												
Minimum Initial (s)	8.0	8.0		8.0	8.0		5.0	15.0		5.0	15.0	
Minimum Split (s)	28.0	28.0		30.0	30.0		12.0	35.0		12.0	35.0	
Total Split (s)	28.0	28.0		30.0	30.0		12.0	35.0		12.0	35.0	
Total Split (%)	26.7%	26.7%		28.6%	28.6%		11.4%	33.3%		11.4%	33.3%	
Yellow Time (s)	3.1	3.1		3.0	3.0		4.4	4.4		4.4	4.4	
All-Red Time (s)	2.4	2.4		2.6	2.6		2.6	2.6		2.6	2.6	
Lost Time Adjust (s)	-1.5	-1.5			-1.6		-3.0	-3.0		-3.0	-3.0	
Total Lost Time (s)	4.0	4.0			4.0		4.0	4.0		4.0	4.0	
Lead/Lag	Lead	Lead		Lag	Lag		Lead	Lag		Lead	Lag	
Lead-Lag Optimize?	Yes	Yes		Yes	Yes		Yes	Yes		Yes	Yes	
Recall Mode	None	None		None	None		None	Min		None	Min	
Act Effct Green (s)	21.5	21.5			14.0		32.2	26.0		31.2	23.1	
Actuated g/C Ratio	0.26	0.26			0.17		0.39	0.31		0.38	0.28	
v/c Ratio	0.24	0.77			0.51		0.56	0.50		0.24	0.60	
Control Delay	27.6	36.8			33.5		24.3	26.1		17.7	27.3	
Queue Delay	0.0	0.0			0.0		0.0	0.0		0.0	0.0	
Total Delay	27.6	36.8			33.5		24.3	26.1		17.7	27.3	
LOS	C	D			C		C	C		B	C	
Approach Delay		34.7			33.5			25.7			26.1	
Approach LOS		C			C			C			C	
Queue Length 50th (ft)	45	148			71		61	128		27	133	
Queue Length 95th (ft)	102	#327			121		113	191		59	197	

Lane Group	EBL	EBT	EBR	WBL	WBT	WBR	NBL	NBT	NBR	SBL	SBT	SBR
Internal Link Dist (ft)		2085			1581			2627			1906	
Turn Bay Length (ft)							150			250		
Base Capacity (vph)	520	543			1096		320	1327		350	1321	
Starvation Cap Reductn	0	0			0		0	0		0	0	
Spillback Cap Reductn	0	0			0		0	0		0	0	
Storage Cap Reductn	0	0			0		0	0		0	0	
Reduced v/c Ratio	0.22	0.69			0.27		0.56	0.41		0.24	0.44	

Intersection Summary

Area Type: Other
Cycle Length: 105
Actuated Cycle Length: 82.9
Natural Cycle: 105
Control Type: Actuated-Uncoordinated
Maximum v/c Ratio: 0.77
Intersection Signal Delay: 28.9 Intersection LOS: C
Intersection Capacity Utilization 65.6% ICU Level of Service C
Analysis Period (min) 15
95th percentile volume exceeds capacity, queue may be longer.
Queue shown is maximum after two cycles.

Splits and Phases: 2: North Main Street & Patrick Henry Drive

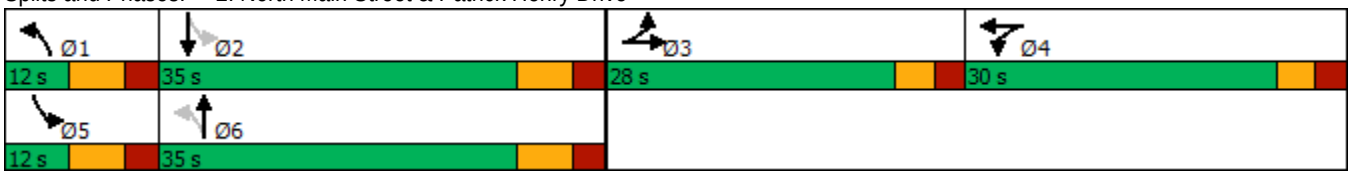

Lane Group	EBL	EBT	EBR	WBL	WBT	WBR	NBL	NBT	NBR	SBL	SBT	SBR
Lane Configurations												
Traffic Volume (vph)	78	53	104	61	86	34	70	217	24	52	529	128
Future Volume (vph)	78	53	104	61	86	34	70	217	24	52	529	128
Ideal Flow (vphpl)	1900	1900	1900	1900	1900	1900	1900	1900	1900	1900	1900	1900
Storage Length (ft)	0		0	0		0	150		0	250		0
Storage Lanes	1		0	0		0	1		0	1		0
Taper Length (ft)	25			25			0			0		
Lane Util. Factor	1.00	1.00	1.00	0.95	0.95	0.95	1.00	0.95	0.95	1.00	0.95	0.95
Frt		0.901			0.972			0.985			0.971	
Flt Protected	0.950				0.983		0.950			0.950		
Satd. Flow (prot)	1770	1678	0	0	3382	0	1770	3486	0	1770	3437	0
Flt Permitted	0.950				0.983		0.248			0.590		
Satd. Flow (perm)	1770	1678	0	0	3382	0	462	3486	0	1099	3437	0
Right Turn on Red			Yes			Yes			Yes			Yes
Satd. Flow (RTOR)		87			26			11			29	
Link Speed (mph)		25			25			35			35	
Link Distance (ft)		2165			1661			2707			1986	
Travel Time (s)		59.0			45.3			52.7			38.7	
Peak Hour Factor	0.92	0.92	0.92	0.92	0.92	0.92	0.92	0.92	0.92	0.92	0.92	0.92
Adj. Flow (vph)	85	58	113	66	93	37	76	236	26	57	575	139
Shared Lane Traffic (%)												
Lane Group Flow (vph)	85	171	0	0	196	0	76	262	0	57	714	0
Turn Type	Split	NA		Split	NA		pm+pt	NA		pm+pt	NA	
Protected Phases	3	3		4	4		1	6		5	2	
Permitted Phases							6			2		
Detector Phase	3	3		4	4		1	6		5	2	
Switch Phase												
Minimum Initial (s)	8.0	8.0		8.0	8.0		5.0	15.0		5.0	15.0	
Minimum Split (s)	28.0	28.0		30.0	30.0		12.0	35.0		12.0	35.0	
Total Split (s)	28.0	28.0		30.0	30.0		12.0	35.0		12.0	35.0	
Total Split (%)	26.7%	26.7%		28.6%	28.6%		11.4%	33.3%		11.4%	33.3%	
Yellow Time (s)	3.1	3.1		3.0	3.0		4.4	4.4		4.4	4.4	
All-Red Time (s)	2.4	2.4		2.6	2.6		2.6	2.6		2.6	2.6	
Lost Time Adjust (s)	-1.5	-1.5			-1.6		-3.0	-3.0		-3.0	-3.0	
Total Lost Time (s)	4.0	4.0			4.0		4.0	4.0		4.0	4.0	
Lead/Lag	Lead	Lead		Lag	Lag		Lead	Lag		Lead	Lag	
Lead-Lag Optimize?	Yes	Yes		Yes	Yes		Yes	Yes		Yes	Yes	
Recall Mode	None	None		None	None		None	Min		None	Min	
Act Effct Green (s)	11.8	11.8			11.3		30.8	26.5		29.9	23.9	
Actuated g/C Ratio	0.17	0.17			0.16		0.45	0.39		0.44	0.35	
v/c Ratio	0.28	0.47			0.34		0.21	0.19		0.10	0.59	
Control Delay	30.3	20.1			26.2		11.3	15.5		10.3	20.7	
Queue Delay	0.0	0.0			0.0		0.0	0.0		0.0	0.0	
Total Delay	30.3	20.1			26.2		11.3	15.5		10.3	20.7	
LOS	C	C			C		B	B		B	C	
Approach Delay		23.5			26.2			14.6			19.9	
Approach LOS		C			C			B			B	
Queue Length 50th (ft)	33	32			34		15	38		11	124	
Queue Length 95th (ft)	80	97			74		42	75		34	207	

Lane Group	EBL	EBT	EBR	WBL	WBT	WBR	NBL	NBT	NBR	SBL	SBT	SBR
Internal Link Dist (ft)		2085			1581			2627			1906	
Turn Bay Length (ft)							150			250		
Base Capacity (vph)	641	663			1344		365	1650		561	1624	
Starvation Cap Reductn	0	0			0		0	0		0	0	
Spillback Cap Reductn	0	0			0		0	0		0	0	
Storage Cap Reductn	0	0			0		0	0		0	0	
Reduced v/c Ratio	0.13	0.26			0.15		0.21	0.16		0.10	0.44	

Intersection Summary

Area Type: Other
Cycle Length: 105
Actuated Cycle Length: 68.5
Natural Cycle: 105
Control Type: Actuated-Uncoordinated
Maximum v/c Ratio: 0.59
Intersection Signal Delay: 20.1 — Intersection LOS: C
Intersection Capacity Utilization 52.0% — ICU Level of Service A
Analysis Period (min) 15

Splits and Phases: 2: North Main Street & Patrick Henry Drive

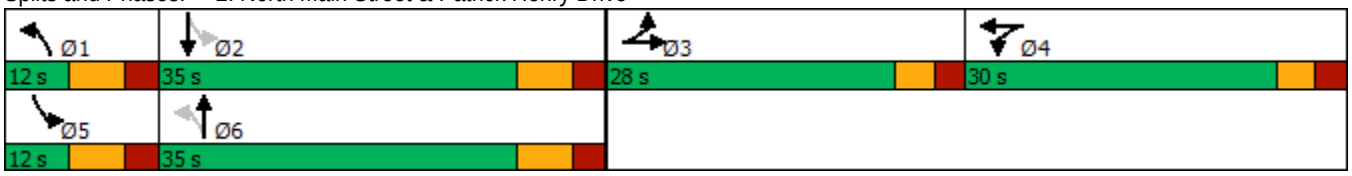

Lane Group	EBL	EBT	EBR	WBL	WBT	WBR	NBL	NBT	NBR	SBL	SBT	SBR
Lane Configurations												
Traffic Volume (vph)	138	145	208	91	152	43	163	442	68	78	444	134
Future Volume (vph)	138	145	208	91	152	43	163	442	68	78	444	134
Ideal Flow (vphpl)	1900	1900	1900	1900	1900	1900	1900	1900	1900	1900	1900	1900
Storage Length (ft)	0		0	0		0	150		0	250		0
Storage Lanes	1		0	0		0	1		0	1		0
Taper Length (ft)	25			25			0			0		
Lane Util. Factor	1.00	1.00	1.00	0.95	0.95	0.95	1.00	0.95	0.95	1.00	0.95	0.95
Frt		0.912			0.977			0.980			0.965	
Flt Protected	0.950				0.984		0.950			0.950		
Satd. Flow (prot)	1770	1699	0	0	3402	0	1770	3468	0	1770	3415	0
Flt Permitted	0.950				0.984		0.246			0.338		
Satd. Flow (perm)	1770	1699	0	0	3402	0	458	3468	0	630	3415	0
Right Turn on Red			Yes			Yes			Yes			Yes
Satd. Flow (RTOR)		64			18			17			38	
Link Speed (mph)		25			25			35			35	
Link Distance (ft)		2165			1661			2707			1986	
Travel Time (s)		59.0			45.3			52.7			38.7	
Peak Hour Factor	0.92	0.92	0.92	0.92	0.92	0.92	0.92	0.92	0.92	0.92	0.92	0.92
Adj. Flow (vph)	150	158	226	99	165	47	177	480	74	85	483	146
Shared Lane Traffic (%)												
Lane Group Flow (vph)	150	384	0	0	311	0	177	554	0	85	629	0
Turn Type	Split	NA		Split	NA		pm+pt	NA		pm+pt	NA	
Protected Phases	3	3		4	4		1	6		5	2	
Permitted Phases							6			2		
Detector Phase	3	3		4	4		1	6		5	2	
Switch Phase												
Minimum Initial (s)	8.0	8.0		8.0	8.0		5.0	15.0		5.0	15.0	
Minimum Split (s)	28.0	28.0		30.0	30.0		12.0	35.0		12.0	35.0	
Total Split (s)	28.0	28.0		30.0	30.0		12.0	35.0		12.0	35.0	
Total Split (%)	26.7%	26.7%		28.6%	28.6%		11.4%	33.3%		11.4%	33.3%	
Yellow Time (s)	3.1	3.1		3.0	3.0		4.4	4.4		4.4	4.4	
All-Red Time (s)	2.4	2.4		2.6	2.6		2.6	2.6		2.6	2.6	
Lost Time Adjust (s)	-1.5	-1.5			-1.6		-3.0	-3.0		-3.0	-3.0	
Total Lost Time (s)	4.0	4.0			4.0		4.0	4.0		4.0	4.0	
Lead/Lag	Lead	Lead		Lag	Lag		Lead	Lag		Lead	Lag	
Lead-Lag Optimize?	Yes	Yes		Yes	Yes		Yes	Yes		Yes	Yes	
Recall Mode	None	None		None	None		None	Min		None	Min	
Act Effct Green (s)	22.2	22.2			14.7		33.4	27.2		32.4	24.3	
Actuated g/C Ratio	0.26	0.26			0.17		0.39	0.32		0.38	0.28	
v/c Ratio	0.33	0.79			0.52		0.58	0.50		0.24	0.63	
Control Delay	29.7	38.7			34.5		25.8	26.4		18.0	28.7	
Queue Delay	0.0	0.0			0.0		0.0	0.0		0.0	0.0	
Total Delay	29.7	38.7			34.5		25.8	26.4		18.0	28.7	
LOS	C	D			C		C	C		B	C	
Approach Delay		36.2			34.5			26.2			27.4	
Approach LOS		D			C			C			C	
Queue Length 50th (ft)	64	159			77		61	131		28	148	
Queue Length 95th (ft)	136	#351			127		115	196		60	220	

Lane Group	EBL	EBT	EBR	WBL	WBT	WBR	NBL	NBT	NBR	SBL	SBT	SBR
Internal Link Dist (ft)		2085			1581			2627			1906	
Turn Bay Length (ft)							150			250		
Base Capacity (vph)	504	530			1063		303	1288		347	1281	
Starvation Cap Reductn	0	0			0		0	0		0	0	
Spillback Cap Reductn	0	0			0		0	0		0	0	
Storage Cap Reductn	0	0			0		0	0		0	0	
Reduced v/c Ratio	0.30	0.72			0.29		0.58	0.43		0.24	0.49	

Intersection Summary

Area Type: Other
Cycle Length: 105
Actuated Cycle Length: 85.5
Natural Cycle: 105
Control Type: Actuated-Uncoordinated
Maximum v/c Ratio: 0.79
Intersection Signal Delay: 30.0 Intersection LOS: C
Intersection Capacity Utilization 67.5% ICU Level of Service C
Analysis Period (min) 15
95th percentile volume exceeds capacity, queue may be longer.
Queue shown is maximum after two cycles.

Splits and Phases: 2: North Main Street & Patrick Henry Drive

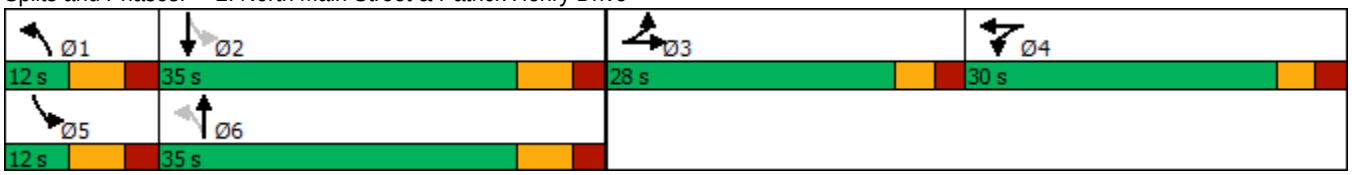

NORTH MAIN STREET

&

MONTGOMERY STREET

Intersection												
Int Delay, s/veh	0.3											

Movement	EBL	EBT	EBR	WBL	WBT	WBR	NBL	NBT	NBR	SBL	SBT	SBR
Lane Configurations												
Traffic Vol, veh/h	0	0	11	7	0	4	6	300	13	4	644	3
Future Vol, veh/h	0	0	11	7	0	4	6	300	13	4	644	3
Conflicting Peds, #/hr	0	0	0	0	0	0	0	0	0	0	0	0
Sign Control	Stop	Stop	Stop	Stop	Stop	Stop	Free	Free	Free	Free	Free	Free
RT Channelized	-	-	None	-	-	None	-	-	None	-	-	None
Storage Length	-	-	-	-	-	-	-	-	-	-	-	-
Veh in Median Storage, #	-	0	-	-	0	-	-	0	-	-	0	-
Grade, %	-	0	-	-	0	-	-	0	-	-	0	-
Peak Hour Factor	92	92	92	92	92	92	92	92	92	92	92	92
Heavy Vehicles, %	2	2	2	2	2	2	2	2	2	2	2	2
Mvmt Flow	0	0	12	8	0	4	7	326	14	4	700	3

Major/Minor	Minor2			Minor1			Major1			Major2		
Conflicting Flow All	887	1064	352	705	1058	170	703	0	0	340	0	0
Stage 1	710	710	-	347	347	-	-	-	-	-	-	-
Stage 2	177	354	-	358	711	-	-	-	-	-	-	-
Critical Hdwy	7.54	6.54	6.94	7.54	6.54	6.94	4.14	-	-	4.14	-	-
Critical Hdwy Stg 1	6.54	5.54	-	6.54	5.54	-	-	-	-	-	-	-
Critical Hdwy Stg 2	6.54	5.54	-	6.54	5.54	-	-	-	-	-	-	-
Follow-up Hdwy	3.52	4.02	3.32	3.52	4.02	3.32	2.22	-	-	2.22	-	-
Pot Cap-1 Maneuver	239	221	644	323	223	844	890	-	-	1216	-	-
Stage 1	391	435	-	642	633	-	-	-	-	-	-	-
Stage 2	808	629	-	633	434	-	-	-	-	-	-	-
Platoon blocked, %								-	-		-	-
Mov Cap-1 Maneuver	235	218	644	313	220	844	890	-	-	1216	-	-
Mov Cap-2 Maneuver	235	218	-	313	220	-	-	-	-	-	-	-
Stage 1	387	433	-	636	627	-	-	-	-	-	-	-
Stage 2	796	623	-	618	432	-	-	-	-	-	-	-

Approach	EB	WB	NB	SB
HCM Control Delay, s	10.7	14.1	0.2	0
HCM LOS	B	B		

Minor Lane/Major Mvmt	NBL	NBT	NBR	EBLn1	WBLn1	SBL	SBT	SBR
Capacity (veh/h)	890	-	-	644	406	1216	-	-
HCM Lane V/C Ratio	0.007	-	-	0.019	0.029	0.004	-	-
HCM Control Delay (s)	9.1	0	-	10.7	14.1	8	0	-
HCM Lane LOS	A	A	-	B	B	A	A	-
HCM 95th %tile Q(veh)	0	-	-	0.1	0.1	0	-	-

Intersection												
Int Delay, s/veh	1											

Movement	EBL	EBT	EBR	WBL	WBT	WBR	NBL	NBT	NBR	SBL	SBT	SBR
Lane Configurations												
Traffic Vol, veh/h	4	0	28	5	0	16	29	645	10	8	662	21
Future Vol, veh/h	4	0	28	5	0	16	29	645	10	8	662	21
Conflicting Peds, #/hr	0	0	0	0	0	0	0	0	0	0	0	0
Sign Control	Stop	Stop	Stop	Stop	Stop	Stop	Free	Free	Free	Free	Free	Free
RT Channelized	-	-	None	-	-	None	-	-	None	-	-	None
Storage Length	-	-	-	-	-	-	-	-	-	-	-	-
Veh in Median Storage, #	-	0	-	-	0	-	-	0	-	-	0	-
Grade, %	-	0	-	-	0	-	-	0	-	-	0	-
Peak Hour Factor	92	92	92	92	92	92	92	92	92	92	92	92
Heavy Vehicles, %	2	2	2	2	2	2	2	2	2	2	2	2
Mvmt Flow	4	0	30	5	0	17	32	701	11	9	720	23

Major/Minor	Minor2			Minor1			Major1			Major2		
Conflicting Flow All	1165	1526	372	1149	1532	356	743	0	0	712	0	0
Stage 1	750	750	-	771	771	-	-	-	-	-	-	-
Stage 2	415	776	-	378	761	-	-	-	-	-	-	-
Critical Hdwy	7.54	6.54	6.94	7.54	6.54	6.94	4.14	-	-	4.14	-	-
Critical Hdwy Stg 1	6.54	5.54	-	6.54	5.54	-	-	-	-	-	-	-
Critical Hdwy Stg 2	6.54	5.54	-	6.54	5.54	-	-	-	-	-	-	-
Follow-up Hdwy	3.52	4.02	3.32	3.52	4.02	3.32	2.22	-	-	2.22	-	-
Pot Cap-1 Maneuver	149	117	625	153	116	640	860	-	-	884	-	-
Stage 1	369	417	-	359	408	-	-	-	-	-	-	-
Stage 2	585	406	-	616	412	-	-	-	-	-	-	-
Platoon blocked, %								-	-		-	-
Mov Cap-1 Maneuver	136	108	625	137	107	640	860	-	-	884	-	-
Mov Cap-2 Maneuver	136	108	-	137	107	-	-	-	-	-	-	-
Stage 1	346	410	-	337	383	-	-	-	-	-	-	-
Stage 2	534	381	-	576	405	-	-	-	-	-	-	-

Approach	EB	WB	NB	SB
HCM Control Delay, s	14.1	16.3	0.7	0.2
HCM LOS	B	C		

Minor Lane/Major Mvmt	NBL	NBT	NBR	EBLn1	WBLn1	SBL	SBT	SBR
Capacity (veh/h)	860	-	-	431	341	884	-	-
HCM Lane V/C Ratio	0.037	-	-	0.081	0.067	0.01	-	-
HCM Control Delay (s)	9.3	0.3	-	14.1	16.3	9.1	0.1	-
HCM Lane LOS	A	A	-	B	C	A	A	-
HCM 95th %tile Q(veh)	0.1	-	-	0.3	0.2	0	-	-

Intersection												
Int Delay, s/veh	0.3											

Movement	EBL	EBT	EBR	WBL	WBT	WBR	NBL	NBT	NBR	SBL	SBT	SBR
Lane Configurations												
Traffic Vol, veh/h	0	0	11	7	0	4	6	305	13	4	657	3
Future Vol, veh/h	0	0	11	7	0	4	6	305	13	4	657	3
Conflicting Peds, #/hr	0	0	0	0	0	0	0	0	0	0	0	0
Sign Control	Stop	Stop	Stop	Stop	Stop	Stop	Free	Free	Free	Free	Free	Free
RT Channelized	-	-	None	-	-	None	-	-	None	-	-	None
Storage Length	-	-	-	-	-	-	-	-	-	-	-	-
Veh in Median Storage, #	-	0	-	-	0	-	-	0	-	-	0	-
Grade, %	-	0	-	-	0	-	-	0	-	-	0	-
Peak Hour Factor	92	92	92	92	92	92	92	92	92	92	92	92
Heavy Vehicles, %	2	2	2	2	2	2	2	2	2	2	2	2
Mvmt Flow	0	0	12	8	0	4	7	332	14	4	714	3

Major/Minor	Minor2			Minor1			Major1			Major2		
Conflicting Flow All	904	1084	359	718	1078	173	717	0	0	346	0	0
Stage 1	724	724	-	353	353	-	-	-	-	-	-	-
Stage 2	180	360	-	365	725	-	-	-	-	-	-	-
Critical Hdwy	7.54	6.54	6.94	7.54	6.54	6.94	4.14	-	-	4.14	-	-
Critical Hdwy Stg 1	6.54	5.54	-	6.54	5.54	-	-	-	-	-	-	-
Critical Hdwy Stg 2	6.54	5.54	-	6.54	5.54	-	-	-	-	-	-	-
Follow-up Hdwy	3.52	4.02	3.32	3.52	4.02	3.32	2.22	-	-	2.22	-	-
Pot Cap-1 Maneuver	232	216	638	316	217	840	880	-	-	1210	-	-
Stage 1	383	429	-	637	629	-	-	-	-	-	-	-
Stage 2	804	625	-	627	428	-	-	-	-	-	-	-
Platoon blocked, %								-	-		-	-
Mov Cap-1 Maneuver	228	213	638	307	214	840	880	-	-	1210	-	-
Mov Cap-2 Maneuver	228	213	-	307	214	-	-	-	-	-	-	-
Stage 1	379	427	-	631	623	-	-	-	-	-	-	-
Stage 2	792	619	-	612	426	-	-	-	-	-	-	-

Approach	EB	WB	NB	SB
HCM Control Delay, s	10.8	14.3	0.2	0
HCM LOS	B	B		

Minor Lane/Major Mvmt	NBL	NBT	NBR	EBLn1	WBLn1	SBL	SBT	SBR
Capacity (veh/h)	880	-	-	638	399	1210	-	-
HCM Lane V/C Ratio	0.007	-	-	0.019	0.03	0.004	-	-
HCM Control Delay (s)	9.1	0	-	10.8	14.3	8	0	-
HCM Lane LOS	A	A	-	B	B	A	A	-
HCM 95th %tile Q(veh)	0	-	-	0.1	0.1	0	-	-

Intersection												
Int Delay, s/veh	1											

Movement	EBL	EBT	EBR	WBL	WBT	WBR	NBL	NBT	NBR	SBL	SBT	SBR
Lane Configurations												
Traffic Vol, veh/h	4	0	28	5	0	16	29	657	10	8	675	21
Future Vol, veh/h	4	0	28	5	0	16	29	657	10	8	675	21
Conflicting Peds, #/hr	0	0	0	0	0	0	0	0	0	0	0	0
Sign Control	Stop	Stop	Stop	Stop	Stop	Stop	Free	Free	Free	Free	Free	Free
RT Channelized	-	-	None	-	-	None	-	-	None	-	-	None
Storage Length	-	-	-	-	-	-	-	-	-	-	-	-
Veh in Median Storage, #	-	0	-	-	0	-	-	0	-	-	0	-
Grade, %	-	0	-	-	0	-	-	0	-	-	0	-
Peak Hour Factor	92	92	92	92	92	92	92	92	92	92	92	92
Heavy Vehicles, %	2	2	2	2	2	2	2	2	2	2	2	2
Mvmt Flow	4	0	30	5	0	17	32	714	11	9	734	23

Major/Minor	Minor2			Minor1			Major1			Major2		
Conflicting Flow All	1185	1553	379	1169	1559	363	757	0	0	725	0	0
Stage 1	764	764	-	784	784	-	-	-	-	-	-	-
Stage 2	421	789	-	385	775	-	-	-	-	-	-	-
Critical Hdwy	7.54	6.54	6.94	7.54	6.54	6.94	4.14	-	-	4.14	-	-
Critical Hdwy Stg 1	6.54	5.54	-	6.54	5.54	-	-	-	-	-	-	-
Critical Hdwy Stg 2	6.54	5.54	-	6.54	5.54	-	-	-	-	-	-	-
Follow-up Hdwy	3.52	4.02	3.32	3.52	4.02	3.32	2.22	-	-	2.22	-	-
Pot Cap-1 Maneuver	144	112	619	148	111	634	850	-	-	874	-	-
Stage 1	362	411	-	352	402	-	-	-	-	-	-	-
Stage 2	581	400	-	610	406	-	-	-	-	-	-	-
Platoon blocked, %								-	-		-	-
Mov Cap-1 Maneuver	131	103	619	132	102	634	850	-	-	874	-	-
Mov Cap-2 Maneuver	131	103	-	132	102	-	-	-	-	-	-	-
Stage 1	339	404	-	330	377	-	-	-	-	-	-	-
Stage 2	529	375	-	570	399	-	-	-	-	-	-	-

Approach	EB	WB	NB	SB
HCM Control Delay, s	14.3	16.6	0.7	0.2
HCM LOS	B	C		

Minor Lane/Major Mvmt	NBL	NBT	NBR	EBLn1	WBLn1	SBL	SBT	SBR
Capacity (veh/h)	850	-	-	422	333	874	-	-
HCM Lane V/C Ratio	0.037	-	-	0.082	0.069	0.01	-	-
HCM Control Delay (s)	9.4	0.3	-	14.3	16.6	9.2	0.1	-
HCM Lane LOS	A	A	-	B	C	A	A	-
HCM 95th %tile Q(veh)	0.1	-	-	0.3	0.2	0	-	-

Intersection												
Int Delay, s/veh	2.7											

Movement	EBL	EBT	EBR	WBL	WBT	WBR	NBL	NBT	NBR	SBL	SBT	SBR
Lane Configurations												
Traffic Vol, veh/h	14	0	86	5	0	16	93	699	10	8	768	26
Future Vol, veh/h	14	0	86	5	0	16	93	699	10	8	768	26
Conflicting Peds, #/hr	0	0	0	0	0	0	0	0	0	0	0	0
Sign Control	Stop	Stop	Stop	Stop	Stop	Stop	Free	Free	Free	Free	Free	Free
RT Channelized	-	-	None	-	-	None	-	-	None	-	-	None
Storage Length	-	-	-	-	-	-	-	-	-	-	-	-
Veh in Median Storage, #	-	0	-	-	0	-	-	0	-	-	0	-
Grade, %	-	0	-	-	0	-	-	0	-	-	0	-
Peak Hour Factor	92	92	92	92	92	92	92	92	92	92	92	92
Heavy Vehicles, %	2	2	2	2	2	2	2	2	2	2	2	2
Mvmt Flow	15	0	93	5	0	17	101	760	11	9	835	28

Major/Minor	Minor2			Minor1			Major1			Major2		
Conflicting Flow All	1449	1840	432	1404	1849	386	863	0	0	771	0	0
Stage 1	867	867	-	968	968	-	-	-	-	-	-	-
Stage 2	582	973	-	436	881	-	-	-	-	-	-	-
Critical Hdwy	7.54	6.54	6.94	7.54	6.54	6.94	4.14	-	-	4.14	-	-
Critical Hdwy Stg 1	6.54	5.54	-	6.54	5.54	-	-	-	-	-	-	-
Critical Hdwy Stg 2	6.54	5.54	-	6.54	5.54	-	-	-	-	-	-	-
Follow-up Hdwy	3.52	4.02	3.32	3.52	4.02	3.32	2.22	-	-	2.22	-	-
Pot Cap-1 Maneuver	92	75	572	99	74	612	775	-	-	840	-	-
Stage 1	314	368	-	273	330	-	-	-	-	-	-	-
Stage 2	466	329	-	569	363	-	-	-	-	-	-	-
Platoon blocked, %								-	-		-	-
Mov Cap-1 Maneuver	73	57	572	67	56	612	775	-	-	840	-	-
Mov Cap-2 Maneuver	73	57	-	67	56	-	-	-	-	-	-	-
Stage 1	242	360	-	211	255	-	-	-	-	-	-	-
Stage 2	350	254	-	466	355	-	-	-	-	-	-	-

Approach	EB	WB	NB	SB
HCM Control Delay, s	24.5	24.4	2	0.2
HCM LOS	C	C		

Minor Lane/Major Mvmt	NBL	NBT	NBR	EBLn1	WBLn1	SBL	SBT	SBR
Capacity (veh/h)	775	-	-	292	208	840	-	-
HCM Lane V/C Ratio	0.13	-	-	0.372	0.11	0.01	-	-
HCM Control Delay (s)	10.3	0.9	-	24.5	24.4	9.3	0.1	-
HCM Lane LOS	B	A	-	C	C	A	A	-
HCM 95th %tile Q(veh)	0.4	-	-	1.7	0.4	0	-	-

Intersection												
Int Delay, s/veh	1.2											

Movement	EBL	EBT	EBR	WBL	WBT	WBR	NBL	NBT	NBR	SBL	SBT	SBR
Lane Configurations												
Traffic Vol, veh/h	8	0	58	7	0	4	24	325	13	4	712	5
Future Vol, veh/h	8	0	58	7	0	4	24	325	13	4	712	5
Conflicting Peds, #/hr	0	0	0	0	0	0	0	0	0	0	0	0
Sign Control	Stop	Stop	Stop	Stop	Stop	Stop	Free	Free	Free	Free	Free	Free
RT Channelized	-	-	None	-	-	None	-	-	None	-	-	None
Storage Length	-	-	-	-	-	-	-	-	-	-	-	-
Veh in Median Storage, #	-	0	-	-	0	-	-	0	-	-	0	-
Grade, %	-	0	-	-	0	-	-	0	-	-	0	-
Peak Hour Factor	92	92	92	92	92	92	92	92	92	92	92	92
Heavy Vehicles, %	2	2	2	2	2	2	2	2	2	2	2	2
Mvmt Flow	9	0	63	8	0	4	26	353	14	4	774	5

Major/Minor	Minor2			Minor1			Major1			Major2		
Conflicting Flow All	1014	1204	390	807	1199	184	779	0	0	367	0	0
Stage 1	785	785	-	412	412	-	-	-	-	-	-	-
Stage 2	229	419	-	395	787	-	-	-	-	-	-	-
Critical Hdwy	7.54	6.54	6.94	7.54	6.54	6.94	4.14	-	-	4.14	-	-
Critical Hdwy Stg 1	6.54	5.54	-	6.54	5.54	-	-	-	-	-	-	-
Critical Hdwy Stg 2	6.54	5.54	-	6.54	5.54	-	-	-	-	-	-	-
Follow-up Hdwy	3.52	4.02	3.32	3.52	4.02	3.32	2.22	-	-	2.22	-	-
Pot Cap-1 Maneuver	193	183	609	273	184	827	834	-	-	1188	-	-
Stage 1	352	402	-	588	593	-	-	-	-	-	-	-
Stage 2	753	588	-	602	401	-	-	-	-	-	-	-
Platoon blocked, %								-	-		-	-
Mov Cap-1 Maneuver	185	175	609	236	176	827	834	-	-	1188	-	-
Mov Cap-2 Maneuver	185	175	-	236	176	-	-	-	-	-	-	-
Stage 1	338	400	-	565	570	-	-	-	-	-	-	-
Stage 2	720	565	-	536	399	-	-	-	-	-	-	-

Approach	EB	WB	NB	SB
HCM Control Delay, s	13.9	16.7	0.8	0
HCM LOS	B	C		

Minor Lane/Major Mvmt	NBL	NBT	NBR	EBLn1	WBLn1	SBL	SBT	SBR
Capacity (veh/h)	834	-	-	477	319	1188	-	-
HCM Lane V/C Ratio	0.031	-	-	0.15	0.037	0.004	-	-
HCM Control Delay (s)	9.5	0.2	-	13.9	16.7	8	0	-
HCM Lane LOS	A	A	-	B	C	A	A	-
HCM 95th %tile Q(veh)	0.1	-	-	0.5	0.1	0	-	-

NORTH MAIN STREET

&

YMCA ACCESS/SITE ACCESS

Intersection	
Int Delay, s/veh	0

Movement	WBL	WBR	NBT	NBR	SBL	SBT
Lane Configurations						
Traffic Vol, veh/h	2	0	300	4	4	649
Future Vol, veh/h	2	0	300	4	4	649
Conflicting Peds, #/hr	0	0	0	0	0	0
Sign Control	Stop	Stop	Free	Free	Free	Free
RT Channelized	-	None	-	None	-	None
Storage Length	0	-	-	-	-	-
Veh in Median Storage, #	0	-	0	-	-	0
Grade, %	0	-	0	-	-	0
Peak Hour Factor	92	92	92	92	92	92
Heavy Vehicles, %	2	2	2	2	2	2
Mvmt Flow	2	0	326	4	4	705

Major/Minor	Minor1		Major1		Major2	
Conflicting Flow All	689	165	0	0	330	0
Stage 1	328	-	-	-	-	-
Stage 2	361	-	-	-	-	-
Critical Hdwy	6.84	6.94	-	-	4.14	-
Critical Hdwy Stg 1	5.84	-	-	-	-	-
Critical Hdwy Stg 2	5.84	-	-	-	-	-
Follow-up Hdwy	3.52	3.32	-	-	2.22	-
Pot Cap-1 Maneuver	380	850	-	-	1226	-
Stage 1	702	-	-	-	-	-
Stage 2	676	-	-	-	-	-
Platoon blocked, %			-	-		-
Mov Cap-1 Maneuver	378	850	-	-	1226	-
Mov Cap-2 Maneuver	378	-	-	-	-	-
Stage 1	698	-	-	-	-	-
Stage 2	676	-	-	-	-	-

Approach	WB	NB	SB
HCM Control Delay, s	14.6	0	0
HCM LOS	B		

Minor Lane/Major Mvmt	NBT	NBR	WBLn1	SBL	SBT
Capacity (veh/h)	-	-	378	1226	-
HCM Lane V/C Ratio	-	-	0.006	0.004	-
HCM Control Delay (s)	-	-	14.6	7.9	0
HCM Lane LOS	-	-	B	A	A
HCM 95th %tile Q(veh)	-	-	0	0	-

Intersection						
Int Delay, s/veh	0.2					

Movement	WBL	WBR	NBT	NBR	SBL	SBT
Lane Configurations						
Traffic Vol, veh/h	10	9	660	5	2	681
Future Vol, veh/h	10	9	660	5	2	681
Conflicting Peds, #/hr	0	0	0	0	0	0
Sign Control	Stop	Stop	Free	Free	Free	Free
RT Channelized	-	None	-	None	-	None
Storage Length	0	-	-	-	-	-
Veh in Median Storage, #	0	-	0	-	-	0
Grade, %	0	-	0	-	-	0
Peak Hour Factor	92	92	92	92	92	92
Heavy Vehicles, %	2	2	2	2	2	2
Mvmt Flow	11	10	717	5	2	740

Major/Minor	Minor1		Major1		Major2	
Conflicting Flow All	1094	361	0	0	722	0
Stage 1	720	-	-	-	-	-
Stage 2	374	-	-	-	-	-
Critical Hdwy	6.84	6.94	-	-	4.14	-
Critical Hdwy Stg 1	5.84	-	-	-	-	-
Critical Hdwy Stg 2	5.84	-	-	-	-	-
Follow-up Hdwy	3.52	3.32	-	-	2.22	-
Pot Cap-1 Maneuver	208	636	-	-	876	-
Stage 1	443	-	-	-	-	-
Stage 2	666	-	-	-	-	-
Platoon blocked, %			-	-		-
Mov Cap-1 Maneuver	207	636	-	-	876	-
Mov Cap-2 Maneuver	207	-	-	-	-	-
Stage 1	441	-	-	-	-	-
Stage 2	666	-	-	-	-	-

Approach	WB	NB	SB
HCM Control Delay, s	17.7	0	0
HCM LOS	C		

Minor Lane/Major Mvmt	NBT	NBR	WBLn1	SBL	SBT
Capacity (veh/h)	-	-	304	876	-
HCM Lane V/C Ratio	-	-	0.068	0.002	-
HCM Control Delay (s)	-	-	17.7	9.1	0
HCM Lane LOS	-	-	C	A	A
HCM 95th %tile Q(veh)	-	-	0.2	0	-

Intersection	
Int Delay, s/veh	0

Movement	WBL	WBR	NBT	NBR	SBL	SBT
Lane Configurations						
Traffic Vol, veh/h	2	0	305	4	4	663
Future Vol, veh/h	2	0	305	4	4	663
Conflicting Peds, #/hr	0	0	0	0	0	0
Sign Control	Stop	Stop	Free	Free	Free	Free
RT Channelized	-	None	-	None	-	None
Storage Length	0	-	-	-	-	-
Veh in Median Storage, #	0	-	0	-	-	0
Grade, %	0	-	0	-	-	0
Peak Hour Factor	92	92	92	92	92	92
Heavy Vehicles, %	2	2	2	2	2	2
Mvmt Flow	2	0	332	4	4	721

Major/Minor	Minor1		Major1		Major2	
Conflicting Flow All	703	168	0	0	336	0
Stage 1	334	-	-	-	-	-
Stage 2	369	-	-	-	-	-
Critical Hdwy	6.84	6.94	-	-	4.14	-
Critical Hdwy Stg 1	5.84	-	-	-	-	-
Critical Hdwy Stg 2	5.84	-	-	-	-	-
Follow-up Hdwy	3.52	3.32	-	-	2.22	-
Pot Cap-1 Maneuver	372	847	-	-	1220	-
Stage 1	697	-	-	-	-	-
Stage 2	670	-	-	-	-	-
Platoon blocked, %			-	-		-
Mov Cap-1 Maneuver	370	847	-	-	1220	-
Mov Cap-2 Maneuver	370	-	-	-	-	-
Stage 1	694	-	-	-	-	-
Stage 2	670	-	-	-	-	-

Approach	WB	NB	SB
HCM Control Delay, s	14.8	0	0
HCM LOS	B		

Minor Lane/Major Mvmt	NBT	NBR	WBLn1	SBL	SBT
Capacity (veh/h)	-	-	370	1220	-
HCM Lane V/C Ratio	-	-	0.006	0.004	-
HCM Control Delay (s)	-	-	14.8	8	0
HCM Lane LOS	-	-	B	A	A
HCM 95th %tile Q(veh)	-	-	0	0	-

Intersection						
Int Delay, s/veh	0.2					

Movement	WBL	WBR	NBT	NBR	SBL	SBT
Lane Configurations						
Traffic Vol, veh/h	10	9	673	5	2	694
Future Vol, veh/h	10	9	673	5	2	694
Conflicting Peds, #/hr	0	0	0	0	0	0
Sign Control	Stop	Stop	Free	Free	Free	Free
RT Channelized	-	None	-	None	-	None
Storage Length	0	-	-	-	-	-
Veh in Median Storage, #	0	-	0	-	-	0
Grade, %	0	-	0	-	-	0
Peak Hour Factor	92	92	92	92	92	92
Heavy Vehicles, %	2	2	2	2	2	2
Mvmt Flow	11	10	732	5	2	754

Major/Minor	Minor1		Major1		Major2	
Conflicting Flow All	1116	369	0	0	737	0
Stage 1	735	-	-	-	-	-
Stage 2	381	-	-	-	-	-
Critical Hdwy	6.84	6.94	-	-	4.14	-
Critical Hdwy Stg 1	5.84	-	-	-	-	-
Critical Hdwy Stg 2	5.84	-	-	-	-	-
Follow-up Hdwy	3.52	3.32	-	-	2.22	-
Pot Cap-1 Maneuver	202	628	-	-	865	-
Stage 1	435	-	-	-	-	-
Stage 2	660	-	-	-	-	-
Platoon blocked, %			-	-		-
Mov Cap-1 Maneuver	201	628	-	-	865	-
Mov Cap-2 Maneuver	201	-	-	-	-	-
Stage 1	433	-	-	-	-	-
Stage 2	660	-	-	-	-	-

Approach	WB	NB	SB
HCM Control Delay, s	18.1	0	0
HCM LOS	C		

Minor Lane/Major Mvmt	NBT	NBR	WBLn1	SBL	SBT
Capacity (veh/h)	-	-	296	865	-
HCM Lane V/C Ratio	-	-	0.07	0.003	-
HCM Control Delay (s)	-	-	18.1	9.2	0
HCM Lane LOS	-	-	C	A	A
HCM 95th %tile Q(veh)	-	-	0.2	0	-

Intersection												
Int Delay, s/veh	0.9											

Movement	EBL	EBT	EBR	WBL	WBT	WBR	NBL	NBT	NBR	SBL	SBT	SBR
Lane Configurations												
Traffic Vol, veh/h	0	0	61	2	0	0	24	309	4	4	659	33
Future Vol, veh/h	0	0	61	2	0	0	24	309	4	4	659	33
Conflicting Peds, #/hr	0	0	0	0	0	0	0	0	0	0	0	0
Sign Control	Stop	Stop	Stop	Stop	Stop	Stop	Free	Free	Free	Free	Free	Free
RT Channelized	-	-	None	-	-	None	-	-	None	-	-	None
Storage Length	-	-	0	-	-	-	-	-	-	-	-	-
Veh in Median Storage, #	-	0	-	-	0	-	-	0	-	-	0	-
Grade, %	-	0	-	-	0	-	-	0	-	-	0	-
Peak Hour Factor	92	92	92	92	92	92	92	92	92	92	92	92
Heavy Vehicles, %	2	2	2	2	2	2	2	2	2	2	2	2
Mvmt Flow	0	0	66	2	0	0	26	336	4	4	716	36

Major/Minor	Minor2			Minor1			Major1			Major2		
Conflicting Flow All	-	-	376	756	1150	170	752	0	0	340	0	0
Stage 1	-	-	-	390	390	-	-	-	-	-	-	-
Stage 2	-	-	-	366	760	-	-	-	-	-	-	-
Critical Hdwy	-	-	6.94	7.54	6.54	6.94	4.14	-	-	4.14	-	-
Critical Hdwy Stg 1	-	-	-	6.54	5.54	-	-	-	-	-	-	-
Critical Hdwy Stg 2	-	-	-	6.54	5.54	-	-	-	-	-	-	-
Follow-up Hdwy	-	-	3.32	3.52	4.02	3.32	2.22	-	-	2.22	-	-
Pot Cap-1 Maneuver	0	0	622	297	197	844	853	-	-	1216	-	-
Stage 1	0	0	-	606	606	-	-	-	-	-	-	-
Stage 2	0	0	-	626	413	-	-	-	-	-	-	-
Platoon blocked, %								-	-		-	-
Mov Cap-1 Maneuver	-	-	622	257	188	844	853	-	-	1216	-	-
Mov Cap-2 Maneuver	-	-	-	257	188	-	-	-	-	-	-	-
Stage 1	-	-	-	583	583	-	-	-	-	-	-	-
Stage 2	-	-	-	556	411	-	-	-	-	-	-	-

Approach	EB	WB	NB	SB
HCM Control Delay, s	11.5	19.1	0.8	0
HCM LOS	B	C		

Minor Lane/Major Mvmt	NBL	NBT	NBR	EBLn1	WBLn1	SBL	SBT	SBR
Capacity (veh/h)	853	-	-	622	257	1216	-	-
HCM Lane V/C Ratio	0.031	-	-	0.107	0.008	0.004	-	-
HCM Control Delay (s)	9.4	0.2	-	11.5	19.1	8	0	-
HCM Lane LOS	A	A	-	B	C	A	A	-
HCM 95th %tile Q(veh)	0.1	-	-	0.4	0	0	-	-

Intersection												
Int Delay, s/veh	1.8											

Movement	EBL	EBT	EBR	WBL	WBT	WBR	NBL	NBT	NBR	SBL	SBT	SBR
Lane Configurations												
Traffic Vol, veh/h	0	0	112	10	0	9	56	669	5	2	680	63
Future Vol, veh/h	0	0	112	10	0	9	56	669	5	2	680	63
Conflicting Peds, #/hr	0	0	0	0	0	0	0	0	0	0	0	0
Sign Control	Stop	Stop	Stop	Stop	Stop	Stop	Free	Free	Free	Free	Free	Free
RT Channelized	-	-	None	-	-	None	-	-	None	-	-	None
Storage Length	-	-	0	-	-	-	-	-	-	-	-	-
Veh in Median Storage, #	-	0	-	-	0	-	-	0	-	-	0	-
Grade, %	-	0	-	-	0	-	-	0	-	-	0	-
Peak Hour Factor	92	92	92	92	92	92	92	92	92	92	92	92
Heavy Vehicles, %	2	2	2	2	2	2	2	2	2	2	2	2
Mvmt Flow	0	0	122	11	0	10	61	727	5	2	739	68

Major/Minor	Minor2			Minor1			Major1			Major2		
Conflicting Flow All	-	-	404	1226	1663	366	807	0	0	732	0	0
Stage 1	-	-	-	852	852	-	-	-	-	-	-	-
Stage 2	-	-	-	374	811	-	-	-	-	-	-	-
Critical Hdwy	-	-	6.94	7.54	6.54	6.94	4.14	-	-	4.14	-	-
Critical Hdwy Stg 1	-	-	-	6.54	5.54	-	-	-	-	-	-	-
Critical Hdwy Stg 2	-	-	-	6.54	5.54	-	-	-	-	-	-	-
Follow-up Hdwy	-	-	3.32	3.52	4.02	3.32	2.22	-	-	2.22	-	-
Pot Cap-1 Maneuver	0	0	596	135	96	631	814	-	-	868	-	-
Stage 1	0	0	-	321	374	-	-	-	-	-	-	-
Stage 2	0	0	-	619	391	-	-	-	-	-	-	-
Platoon blocked, %								-	-		-	-
Mov Cap-1 Maneuver	-	-	596	97	84	631	814	-	-	868	-	-
Mov Cap-2 Maneuver	-	-	-	97	84	-	-	-	-	-	-	-
Stage 1	-	-	-	280	327	-	-	-	-	-	-	-
Stage 2	-	-	-	491	389	-	-	-	-	-	-	-

Approach	EB	WB	NB	SB
HCM Control Delay, s	12.6	30.4	1.2	0
HCM LOS	B	D		

Minor Lane/Major Mvmt	NBL	NBT	NBR	EBLn1	WBLn1	SBL	SBT	SBR
Capacity (veh/h)	814	-	-	596	162	868	-	-
HCM Lane V/C Ratio	0.075	-	-	0.204	0.127	0.003	-	-
HCM Control Delay (s)	9.8	0.5	-	12.6	30.4	9.2	0	-
HCM Lane LOS	A	A	-	B	D	A	A	-
HCM 95th %tile Q(veh)	0.2	-	-	0.8	0.4	0	-	-

NORTH MAIN STREET

&

LUCAS DRIVE

Intersection												
Int Delay, s/veh	0.4											

Movement	EBL	EBT	EBR	WBL	WBT	WBR	NBL	NBT	NBR	SBL	SBT	SBR
Lane Configurations												
Traffic Vol, veh/h	1	0	6	7	0	10	4	287	9	6	640	5
Future Vol, veh/h	1	0	6	7	0	10	4	287	9	6	640	5
Conflicting Peds, #/hr	0	0	0	0	0	0	0	0	0	0	0	0
Sign Control	Stop	Stop	Stop	Stop	Stop	Stop	Free	Free	Free	Free	Free	Free
RT Channelized	-	-	None	-	-	None	-	-	None	-	-	None
Storage Length	-	-	-	-	-	-	-	-	-	-	-	-
Veh in Median Storage, #	-	0	-	-	0	-	-	0	-	-	0	-
Grade, %	-	0	-	-	0	-	-	0	-	-	0	-
Peak Hour Factor	92	92	92	92	92	92	92	92	92	92	92	92
Heavy Vehicles, %	2	2	2	2	2	2	2	2	2	2	2	2
Mvmt Flow	1	0	7	8	0	11	4	312	10	7	696	5

Major/Minor	Minor2			Minor1			Major1			Major2		
Conflicting Flow All	877	1043	351	687	1040	161	701	0	0	322	0	0
Stage 1	713	713	-	325	325	-	-	-	-	-	-	-
Stage 2	164	330	-	362	715	-	-	-	-	-	-	-
Critical Hdwy	7.54	6.54	6.94	7.54	6.54	6.94	4.14	-	-	4.14	-	-
Critical Hdwy Stg 1	6.54	5.54	-	6.54	5.54	-	-	-	-	-	-	-
Critical Hdwy Stg 2	6.54	5.54	-	6.54	5.54	-	-	-	-	-	-	-
Follow-up Hdwy	3.52	4.02	3.32	3.52	4.02	3.32	2.22	-	-	2.22	-	-
Pot Cap-1 Maneuver	243	228	645	333	229	855	892	-	-	1235	-	-
Stage 1	389	434	-	661	648	-	-	-	-	-	-	-
Stage 2	822	644	-	629	433	-	-	-	-	-	-	-
Platoon blocked, %								-	-		-	-
Mov Cap-1 Maneuver	237	225	645	326	226	855	892	-	-	1235	-	-
Mov Cap-2 Maneuver	237	225	-	326	226	-	-	-	-	-	-	-
Stage 1	387	430	-	658	645	-	-	-	-	-	-	-
Stage 2	807	641	-	617	429	-	-	-	-	-	-	-

Approach	EB	WB	NB	SB
HCM Control Delay, s	12.1	12.3	0.1	0.1
HCM LOS	B	B		

Minor Lane/Major Mvmt	NBL	NBT	NBR	EBLn1	WBLn1	SBL	SBT	SBR
Capacity (veh/h)	892	-	-	518	513	1235	-	-
HCM Lane V/C Ratio	0.005	-	-	0.015	0.036	0.005	-	-
HCM Control Delay (s)	9.1	0	-	12.1	12.3	7.9	0	-
HCM Lane LOS	A	A	-	B	B	A	A	-
HCM 95th %tile Q(veh)	0	-	-	0	0.1	0	-	-

Intersection												
Int Delay, s/veh	0.8											

Movement	EBL	EBT	EBR	WBL	WBT	WBR	NBL	NBT	NBR	SBL	SBT	SBR
Lane Configurations												
Traffic Vol, veh/h	7	1	19	9	0	9	14	641	14	7	655	11
Future Vol, veh/h	7	1	19	9	0	9	14	641	14	7	655	11
Conflicting Peds, #/hr	0	0	0	0	0	0	0	0	0	0	0	0
Sign Control	Stop	Stop	Stop	Stop	Stop	Stop	Free	Free	Free	Free	Free	Free
RT Channelized	-	-	None	-	-	None	-	-	None	-	-	None
Storage Length	-	-	-	-	-	-	-	-	-	-	-	-
Veh in Median Storage, #	-	0	-	-	0	-	-	0	-	-	0	-
Grade, %	-	0	-	-	0	-	-	0	-	-	0	-
Peak Hour Factor	92	92	92	92	92	92	92	92	92	92	92	92
Heavy Vehicles, %	2	2	2	2	2	2	2	2	2	2	2	2
Mvmt Flow	8	1	21	10	0	10	15	697	15	8	712	12

Major/Minor	Minor2			Minor1			Major1			Major2		
Conflicting Flow All	1113	1476	362	1108	1475	356	724	0	0	712	0	0
Stage 1	734	734	-	735	735	-	-	-	-	-	-	-
Stage 2	379	742	-	373	740	-	-	-	-	-	-	-
Critical Hdwy	7.54	6.54	6.94	7.54	6.54	6.94	4.14	-	-	4.14	-	-
Critical Hdwy Stg 1	6.54	5.54	-	6.54	5.54	-	-	-	-	-	-	-
Critical Hdwy Stg 2	6.54	5.54	-	6.54	5.54	-	-	-	-	-	-	-
Follow-up Hdwy	3.52	4.02	3.32	3.52	4.02	3.32	2.22	-	-	2.22	-	-
Pot Cap-1 Maneuver	163	125	635	164	125	640	874	-	-	884	-	-
Stage 1	378	424	-	377	424	-	-	-	-	-	-	-
Stage 2	615	420	-	620	421	-	-	-	-	-	-	-
Platoon blocked, %								-	-		-	-
Mov Cap-1 Maneuver	155	120	635	153	120	640	874	-	-	884	-	-
Mov Cap-2 Maneuver	155	120	-	153	120	-	-	-	-	-	-	-
Stage 1	367	418	-	366	412	-	-	-	-	-	-	-
Stage 2	589	408	-	589	415	-	-	-	-	-	-	-

Approach	EB	WB	NB	SB
HCM Control Delay, s	17.2	20.8	0.3	0.2
HCM LOS	C	C		

Minor Lane/Major Mvmt	NBL	NBT	NBR	EBLn1	WBLn1	SBL	SBT	SBR
Capacity (veh/h)	874	-	-	324	247	884	-	-
HCM Lane V/C Ratio	0.017	-	-	0.091	0.079	0.009	-	-
HCM Control Delay (s)	9.2	0.1	-	17.2	20.8	9.1	0.1	-
HCM Lane LOS	A	A	-	C	C	A	A	-
HCM 95th %tile Q(veh)	0.1	-	-	0.3	0.3	0	-	-

Intersection												
Int Delay, s/veh	0.4											

Movement	EBL	EBT	EBR	WBL	WBT	WBR	NBL	NBT	NBR	SBL	SBT	SBR
Lane Configurations												
Traffic Vol, veh/h	1	0	6	7	0	10	4	292	9	6	653	5
Future Vol, veh/h	1	0	6	7	0	10	4	292	9	6	653	5
Conflicting Peds, #/hr	0	0	0	0	0	0	0	0	0	0	0	0
Sign Control	Stop	Stop	Stop	Stop	Stop	Stop	Free	Free	Free	Free	Free	Free
RT Channelized	-	-	None	-	-	None	-	-	None	-	-	None
Storage Length	-	-	-	-	-	-	-	-	-	-	-	-
Veh in Median Storage, #	-	0	-	-	0	-	-	0	-	-	0	-
Grade, %	-	0	-	-	0	-	-	0	-	-	0	-
Peak Hour Factor	92	92	92	92	92	92	92	92	92	92	92	92
Heavy Vehicles, %	2	2	2	2	2	2	2	2	2	2	2	2
Mvmt Flow	1	0	7	8	0	11	4	317	10	7	710	5

Major/Minor	Minor2			Minor1			Major1			Major2		
Conflicting Flow All	894	1062	358	699	1059	164	715	0	0	327	0	0
Stage 1	727	727	-	330	330	-	-	-	-	-	-	-
Stage 2	167	335	-	369	729	-	-	-	-	-	-	-
Critical Hdwy	7.54	6.54	6.94	7.54	6.54	6.94	4.14	-	-	4.14	-	-
Critical Hdwy Stg 1	6.54	5.54	-	6.54	5.54	-	-	-	-	-	-	-
Critical Hdwy Stg 2	6.54	5.54	-	6.54	5.54	-	-	-	-	-	-	-
Follow-up Hdwy	3.52	4.02	3.32	3.52	4.02	3.32	2.22	-	-	2.22	-	-
Pot Cap-1 Maneuver	236	222	638	327	223	852	881	-	-	1229	-	-
Stage 1	381	427	-	657	644	-	-	-	-	-	-	-
Stage 2	818	641	-	623	426	-	-	-	-	-	-	-
Platoon blocked, %								-	-		-	-
Mov Cap-1 Maneuver	230	219	638	320	220	852	881	-	-	1229	-	-
Mov Cap-2 Maneuver	230	219	-	320	220	-	-	-	-	-	-	-
Stage 1	379	423	-	653	640	-	-	-	-	-	-	-
Stage 2	803	637	-	611	422	-	-	-	-	-	-	-

Approach	EB	WB	NB	SB
HCM Control Delay, s	12.2	12.4	0.1	0.1
HCM LOS	B	B		

Minor Lane/Major Mvmt	NBL	NBT	NBR	EBLn1	WBLn1	SBL	SBT	SBR
Capacity (veh/h)	881	-	-	509	506	1229	-	-
HCM Lane V/C Ratio	0.005	-	-	0.015	0.037	0.005	-	-
HCM Control Delay (s)	9.1	0	-	12.2	12.4	7.9	0	-
HCM Lane LOS	A	A	-	B	B	A	A	-
HCM 95th %tile Q(veh)	0	-	-	0	0.1	0	-	-

Intersection												
Int Delay, s/veh	0.8											

Movement	EBL	EBT	EBR	WBL	WBT	WBR	NBL	NBT	NBR	SBL	SBT	SBR
Lane Configurations												
Traffic Vol, veh/h	7	1	19	9	0	9	14	653	14	7	668	11
Future Vol, veh/h	7	1	19	9	0	9	14	653	14	7	668	11
Conflicting Peds, #/hr	0	0	0	0	0	0	0	0	0	0	0	0
Sign Control	Stop	Stop	Stop	Stop	Stop	Stop	Free	Free	Free	Free	Free	Free
RT Channelized	-	-	None	-	-	None	-	-	None	-	-	None
Storage Length	-	-	-	-	-	-	-	-	-	-	-	-
Veh in Median Storage, #	-	0	-	-	0	-	-	0	-	-	0	-
Grade, %	-	0	-	-	0	-	-	0	-	-	0	-
Peak Hour Factor	92	92	92	92	92	92	92	92	92	92	92	92
Heavy Vehicles, %	2	2	2	2	2	2	2	2	2	2	2	2
Mvmt Flow	8	1	21	10	0	10	15	710	15	8	726	12

Major/Minor	Minor2			Minor1			Major1			Major2		
Conflicting Flow All	1133	1503	369	1128	1502	363	738	0	0	725	0	0
Stage 1	748	748	-	748	748	-	-	-	-	-	-	-
Stage 2	385	755	-	380	754	-	-	-	-	-	-	-
Critical Hdwy	7.54	6.54	6.94	7.54	6.54	6.94	4.14	-	-	4.14	-	-
Critical Hdwy Stg 1	6.54	5.54	-	6.54	5.54	-	-	-	-	-	-	-
Critical Hdwy Stg 2	6.54	5.54	-	6.54	5.54	-	-	-	-	-	-	-
Follow-up Hdwy	3.52	4.02	3.32	3.52	4.02	3.32	2.22	-	-	2.22	-	-
Pot Cap-1 Maneuver	158	120	628	159	121	634	864	-	-	874	-	-
Stage 1	371	418	-	371	418	-	-	-	-	-	-	-
Stage 2	610	415	-	614	415	-	-	-	-	-	-	-
Platoon blocked, %								-	-		-	-
Mov Cap-1 Maneuver	150	115	628	148	116	634	864	-	-	874	-	-
Mov Cap-2 Maneuver	150	115	-	148	116	-	-	-	-	-	-	-
Stage 1	360	411	-	360	406	-	-	-	-	-	-	-
Stage 2	583	403	-	583	408	-	-	-	-	-	-	-

Approach	EB	WB	NB	SB
HCM Control Delay, s	17.6	21.3	0.3	0.2
HCM LOS	C	C		

Minor Lane/Major Mvmt	NBL	NBT	NBR	EBLn1	WBLn1	SBL	SBT	SBR
Capacity (veh/h)	864	-	-	315	240	874	-	-
HCM Lane V/C Ratio	0.018	-	-	0.093	0.082	0.009	-	-
HCM Control Delay (s)	9.2	0.1	-	17.6	21.3	9.2	0.1	-
HCM Lane LOS	A	A	-	C	C	A	A	-
HCM 95th %tile Q(veh)	0.1	-	-	0.3	0.3	0	-	-

Intersection						
Int Delay, s/veh	0.3					

Movement	WBL	WBR	NBT	NBR	SBL	SBT
Lane Configurations						
Traffic Vol, veh/h	8	10	300	9	6	687
Future Vol, veh/h	8	10	300	9	6	687
Conflicting Peds, #/hr	0	0	0	0	0	0
Sign Control	Stop	Stop	Free	Free	Free	Free
RT Channelized	-	None	-	None	-	None
Storage Length	0	-	-	-	-	-
Veh in Median Storage, #	0	-	0	-	-	0
Grade, %	0	-	0	-	-	0
Peak Hour Factor	92	92	92	92	92	92
Heavy Vehicles, %	2	2	2	2	2	2
Mvmt Flow	9	11	326	10	7	747

Major/Minor	Minor1		Major1		Major2	
Conflicting Flow All	719	168	0	0	336	0
Stage 1	331	-	-	-	-	-
Stage 2	388	-	-	-	-	-
Critical Hdwy	6.84	6.94	-	-	4.14	-
Critical Hdwy Stg 1	5.84	-	-	-	-	-
Critical Hdwy Stg 2	5.84	-	-	-	-	-
Follow-up Hdwy	3.52	3.32	-	-	2.22	-
Pot Cap-1 Maneuver	363	847	-	-	1220	-
Stage 1	700	-	-	-	-	-
Stage 2	655	-	-	-	-	-
Platoon blocked, %			-	-		-
Mov Cap-1 Maneuver	359	847	-	-	1220	-
Mov Cap-2 Maneuver	359	-	-	-	-	-
Stage 1	693	-	-	-	-	-
Stage 2	655	-	-	-	-	-

Approach	WB	NB	SB
HCM Control Delay, s	12.1	0	0.1
HCM LOS	B		

Minor Lane/Major Mvmt	NBT	NBR	WBLn1	SBL	SBT
Capacity (veh/h)	-	-	528	1220	-
HCM Lane V/C Ratio	-	-	0.037	0.005	-
HCM Control Delay (s)	-	-	12.1	8	0
HCM Lane LOS	-	-	B	A	A
HCM 95th %tile Q(veh)	-	-	0.1	0	-

Intersection						
Int Delay, s/veh	0.4					

Movement	WBL	WBR	NBT	NBR	SBL	SBT
Lane Configurations						
Traffic Vol, veh/h	10	9	663	14	7	735
Future Vol, veh/h	10	9	663	14	7	735
Conflicting Peds, #/hr	0	0	0	0	0	0
Sign Control	Stop	Stop	Free	Free	Free	Free
RT Channelized	-	None	-	None	-	None
Storage Length	0	-	-	-	-	-
Veh in Median Storage, #	0	-	0	-	-	0
Grade, %	0	-	0	-	-	0
Peak Hour Factor	92	92	92	92	92	92
Heavy Vehicles, %	2	2	2	2	2	2
Mvmt Flow	11	10	721	15	8	799

Major/Minor	Minor1		Major1		Major2	
Conflicting Flow All	1145	368	0	0	736	0
Stage 1	729	-	-	-	-	-
Stage 2	416	-	-	-	-	-
Critical Hdwy	6.84	6.94	-	-	4.14	-
Critical Hdwy Stg 1	5.84	-	-	-	-	-
Critical Hdwy Stg 2	5.84	-	-	-	-	-
Follow-up Hdwy	3.52	3.32	-	-	2.22	-
Pot Cap-1 Maneuver	193	629	-	-	865	-
Stage 1	438	-	-	-	-	-
Stage 2	634	-	-	-	-	-
Platoon blocked, %			-	-		-
Mov Cap-1 Maneuver	190	629	-	-	865	-
Mov Cap-2 Maneuver	190	-	-	-	-	-
Stage 1	431	-	-	-	-	-
Stage 2	634	-	-	-	-	-

Approach	WB	NB	SB
HCM Control Delay, s	18.7	0	0.2
HCM LOS	C		

Minor Lane/Major Mvmt	NBT	NBR	WBLn1	SBL	SBT
Capacity (veh/h)	-	-	284	865	-
HCM Lane V/C Ratio	-	-	0.073	0.009	-
HCM Control Delay (s)	-	-	18.7	9.2	0.1
HCM Lane LOS	-	-	C	A	A
HCM 95th %tile Q(veh)	-	-	0.2	0	-

MONTGOMERY STREET

&

SITE ACCESS

Intersection						
Int Delay, s/veh	5.2					

Movement	EBL	EBT	WBT	WBR	SBL	SBR
Lane Configurations						
Traffic Vol, veh/h	0	11	9	20	55	0
Future Vol, veh/h	0	11	9	20	55	0
Conflicting Peds, #/hr	0	0	0	0	0	0
Sign Control	Free	Free	Free	Free	Stop	Stop
RT Channelized	-	None	-	None	-	None
Storage Length	-	-	-	-	0	-
Veh in Median Storage, #	-	0	0	-	0	-
Grade, %	-	0	0	-	0	-
Peak Hour Factor	92	92	92	92	92	92
Heavy Vehicles, %	2	2	2	2	2	2
Mvmt Flow	0	12	10	22	60	0

Major/Minor	Major1		Major2		Minor2	
Conflicting Flow All	32	0	-	0	33	21
Stage 1	-	-	-	-	21	-
Stage 2	-	-	-	-	12	-
Critical Hdwy	4.12	-	-	-	6.42	6.22
Critical Hdwy Stg 1	-	-	-	-	5.42	-
Critical Hdwy Stg 2	-	-	-	-	5.42	-
Follow-up Hdwy	2.218	-	-	-	3.518	3.318
Pot Cap-1 Maneuver	1580	-	-	-	980	1056
Stage 1	-	-	-	-	1002	-
Stage 2	-	-	-	-	1011	-
Platoon blocked, %		-	-	-		
Mov Cap-1 Maneuver	1580	-	-	-	980	1056
Mov Cap-2 Maneuver	-	-	-	-	980	-
Stage 1	-	-	-	-	1002	-
Stage 2	-	-	-	-	1011	-

Approach	EB	WB	SB
HCM Control Delay, s	0	0	8.9
HCM LOS			A

Minor Lane/Major Mvmt	EBL	EBT	WBT	WBR	SBLn1
Capacity (veh/h)	1580	-	-	-	980
HCM Lane V/C Ratio	-	-	-	-	0.061
HCM Control Delay (s)	0	-	-	-	8.9
HCM Lane LOS	A	-	-	-	A
HCM 95th %tile Q(veh)	0	-	-	-	0.2

Intersection	
Int Delay, s/veh	2.9

Movement	EBL	EBT	WBT	WBR	SBL	SBR
Lane Configurations						
Traffic Vol, veh/h	0	32	50	69	68	0
Future Vol, veh/h	0	32	50	69	68	0
Conflicting Peds, #/hr	0	0	0	0	0	0
Sign Control	Free	Free	Free	Free	Stop	Stop
RT Channelized	-	None	-	None	-	None
Storage Length	-	-	-	-	0	-
Veh in Median Storage, #	-	0	0	-	0	-
Grade, %	-	0	0	-	0	-
Peak Hour Factor	92	92	92	92	92	92
Heavy Vehicles, %	2	2	2	2	2	2
Mvmt Flow	0	35	54	75	74	0

Major/Minor	Major1		Major2		Minor2	
Conflicting Flow All	129	0	-	0	127	92
Stage 1	-	-	-	-	92	-
Stage 2	-	-	-	-	35	-
Critical Hdwy	4.12	-	-	-	6.42	6.22
Critical Hdwy Stg 1	-	-	-	-	5.42	-
Critical Hdwy Stg 2	-	-	-	-	5.42	-
Follow-up Hdwy	2.218	-	-	-	3.518	3.318
Pot Cap-1 Maneuver	1457	-	-	-	868	965
Stage 1	-	-	-	-	932	-
Stage 2	-	-	-	-	987	-
Platoon blocked, %		-	-	-		
Mov Cap-1 Maneuver	1457	-	-	-	868	965
Mov Cap-2 Maneuver	-	-	-	-	868	-
Stage 1	-	-	-	-	932	-
Stage 2	-	-	-	-	987	-

Approach	EB	WB	SB
HCM Control Delay, s	0	0	9.5
HCM LOS			A

Minor Lane/Major Mvmt	EBL	EBT	WBT	WBR	SBLn1
Capacity (veh/h)	1457	-	-	-	868
HCM Lane V/C Ratio	-	-	-	-	0.085
HCM Control Delay (s)	0	-	-	-	9.5
HCM Lane LOS	A	-	-	-	A
HCM 95th %tile Q(veh)	0	-	-	-	0.3

APPENDIX F

QUEUING ANALYSIS REPORTS

EXISTING (2018) CONDITIONS

Intersection: 1: North Main Street & Progress Street & McDonald Street

Movement	EB	EB	WB	NB	NB	SB	SB	SW
Directions Served	<	TR	LTR>	LT	TR>	LT	TR	<LR>
Maximum Queue (ft)	22	62	56	111	87	148	147	41
Average Queue (ft)	4	19	22	49	24	63	68	8
95th Queue (ft)	17	45	46	93	60	124	129	28
Link Distance (ft)	1635	1635	1376	1441	1441	312	312	1075
Upstream Blk Time (%)								
Queuing Penalty (veh)								
Storage Bay Dist (ft)								
Storage Blk Time (%)								
Queuing Penalty (veh)								

Intersection: 2: North Main Street & Patrick Henry Drive

Movement	EB	EB	WB	WB	NB	NB	NB	SB	SB	SB
Directions Served	L	TR	LT	TR	L	T	TR	L	T	TR
Maximum Queue (ft)	80	123	110	88	83	84	105	68	182	197
Average Queue (ft)	29	49	57	35	33	34	44	22	91	97
95th Queue (ft)	63	94	97	72	64	71	87	51	154	166
Link Distance (ft)	2109	2109	1615	1615		2644	2644		1930	1930
Upstream Blk Time (%)										
Queuing Penalty (veh)										
Storage Bay Dist (ft)					150			250		
Storage Blk Time (%)										
Queuing Penalty (veh)										

Intersection: 3: North Main Street & Montgomery Street/Business Driveway

Movement	EB	WB	NB	SB	SB
Directions Served	LTR	LTR	LT	LT	TR
Maximum Queue (ft)	26	31	33	27	2
Average Queue (ft)	7	10	3	1	0
95th Queue (ft)	22	32	18	11	2
Link Distance (ft)	1040	1085	312	254	254
Upstream Blk Time (%)					
Queuing Penalty (veh)					
Storage Bay Dist (ft)					
Storage Blk Time (%)					
Queuing Penalty (veh)					

Intersection: 4: North Main Street & YMCA Access

Movement	WB	SB
Directions Served	LR	LT
Maximum Queue (ft)	21	27
Average Queue (ft)	2	2
95th Queue (ft)	13	13
Link Distance (ft)	1032	206
Upstream Blk Time (%)		
Queuing Penalty (veh)		
Storage Bay Dist (ft)		
Storage Blk Time (%)		
Queuing Penalty (veh)		

Intersection: 5: North Main Street & Driveway/Lucas Drive

Movement	EB	WB	NB	SB
Directions Served	LTR	LTR	LT	LT
Maximum Queue (ft)	32	36	36	25
Average Queue (ft)	7	13	2	1
95th Queue (ft)	28	37	18	13
Link Distance (ft)	481	1016	206	2644
Upstream Blk Time (%)				
Queuing Penalty (veh)				
Storage Bay Dist (ft)				
Storage Blk Time (%)				
Queuing Penalty (veh)				

Network Summary

Network wide Queuing Penalty: 0

Intersection: 1: North Main Street & Progress Street & McDonald Street

Movement	EB	EB	WB	NB	NB	SB	SB	SW
Directions Served	<	LTR	LTR>	LT	TR>	<LT	TR	<LR>
Maximum Queue (ft)	67	146	188	222	186	161	170	51
Average Queue (ft)	18	53	78	113	74	82	88	14
95th Queue (ft)	47	109	149	191	159	140	149	39
Link Distance (ft)	1635	1635	1376	1441	1441	312	312	1075
Upstream Blk Time (%)								
Queuing Penalty (veh)								
Storage Bay Dist (ft)								
Storage Blk Time (%)								
Queuing Penalty (veh)								

Intersection: 2: North Main Street & Patrick Henry Drive

Movement	EB	EB	WB	WB	NB	NB	NB	SB	SB	SB
Directions Served	L	TR	LT	TR	L	T	TR	L	T	TR
Maximum Queue (ft)	131	308	155	140	149	199	222	105	191	201
Average Queue (ft)	56	152	89	64	81	101	123	37	105	115
95th Queue (ft)	108	257	140	117	140	173	187	78	170	188
Link Distance (ft)	2109	2109	1615	1615		2644	2644		1930	1930
Upstream Blk Time (%)										
Queuing Penalty (veh)										
Storage Bay Dist (ft)					150			250		
Storage Blk Time (%)					0	1			0	
Queuing Penalty (veh)					1	2			0	

Intersection: 3: North Main Street & Montgomery Street/Business Driveway

Movement	EB	WB	NB	NB	SB	SB
Directions Served	LTR	LTR	LT	TR	LT	TR
Maximum Queue (ft)	46	42	71	19	37	4
Average Queue (ft)	14	16	17	1	3	0
95th Queue (ft)	34	42	53	11	18	3
Link Distance (ft)	1040	1085	312	312	254	254
Upstream Blk Time (%)						
Queuing Penalty (veh)						
Storage Bay Dist (ft)						
Storage Blk Time (%)						
Queuing Penalty (veh)						

Intersection: 4: North Main Street & YMCA Access

Movement	WB	SB
Directions Served	LR	LT
Maximum Queue (ft)	39	28
Average Queue (ft)	17	1
95th Queue (ft)	41	15
Link Distance (ft)	1032	206
Upstream Blk Time (%)		
Queuing Penalty (veh)		
Storage Bay Dist (ft)		
Storage Blk Time (%)		
Queuing Penalty (veh)		

Intersection: 5: North Main Street & Driveway/Lucas Drive

Movement	EB	WB	NB	SB
Directions Served	LTR	LTR	LT	LT
Maximum Queue (ft)	42	47	44	38
Average Queue (ft)	19	14	7	3
95th Queue (ft)	43	40	29	19
Link Distance (ft)	481	1016	206	2644
Upstream Blk Time (%)				
Queuing Penalty (veh)				
Storage Bay Dist (ft)				
Storage Blk Time (%)				
Queuing Penalty (veh)				

Network Summary

Network wide Queuing Penalty: 3

FUTURE (2020) ‘NO-BUILD’ CONDITIONS

Intersection: 1: North Main Street & Progress Street & McDonald Street

Movement	EB	EB	WB	NB	NB	SB	SB	SW
Directions Served	<	TR	LTR>	LT	TR>	LT	TR	<LR>
Maximum Queue (ft)	20	75	71	134	87	165	162	34
Average Queue (ft)	5	22	22	49	23	64	70	8
95th Queue (ft)	18	54	53	94	61	127	134	28
Link Distance (ft)	1635	1635	1376	1441	1441	312	312	1075
Upstream Blk Time (%)								
Queuing Penalty (veh)								
Storage Bay Dist (ft)								
Storage Blk Time (%)								
Queuing Penalty (veh)								

Intersection: 2: North Main Street & Patrick Henry Drive

Movement	EB	EB	WB	WB	NB	NB	NB	SB	SB	SB
Directions Served	L	TR	LT	TR	L	T	TR	L	T	TR
Maximum Queue (ft)	84	144	110	87	80	92	108	60	192	195
Average Queue (ft)	32	57	57	36	32	35	47	21	100	106
95th Queue (ft)	71	110	90	71	65	74	86	49	160	171
Link Distance (ft)	2109	2109	1615	1615		2644	2644		1930	1930
Upstream Blk Time (%)										
Queuing Penalty (veh)										
Storage Bay Dist (ft)					150			250		
Storage Blk Time (%)									0	
Queuing Penalty (veh)									0	

Intersection: 3: North Main Street & Montgomery Street/Business Driveway

Movement	EB	WB	NB	NB	SB
Directions Served	LTR	LTR	LT	TR	LT
Maximum Queue (ft)	24	33	32	2	15
Average Queue (ft)	7	9	3	0	1
95th Queue (ft)	22	32	18	2	9
Link Distance (ft)	1040	1085	312	312	254
Upstream Blk Time (%)					
Queuing Penalty (veh)					
Storage Bay Dist (ft)					
Storage Blk Time (%)					
Queuing Penalty (veh)					

Intersection: 4: North Main Street & YMCA Access

Movement	WB	SB
Directions Served	LR	LT
Maximum Queue (ft)	18	16
Average Queue (ft)	1	1
95th Queue (ft)	9	12
Link Distance (ft)	1032	206
Upstream Blk Time (%)		
Queuing Penalty (veh)		
Storage Bay Dist (ft)		
Storage Blk Time (%)		
Queuing Penalty (veh)		

Intersection: 5: North Main Street & Driveway/Lucas Drive

Movement	EB	WB	NB	SB
Directions Served	LTR	LTR	LT	LT
Maximum Queue (ft)	33	36	22	21
Average Queue (ft)	6	13	1	1
95th Queue (ft)	26	37	11	12
Link Distance (ft)	481	1016	206	2644
Upstream Blk Time (%)				
Queuing Penalty (veh)				
Storage Bay Dist (ft)				
Storage Blk Time (%)				
Queuing Penalty (veh)				

Network Summary

Network wide Queuing Penalty: 0

Intersection: 1: North Main Street & Progress Street & McDonald Street

Movement	EB	EB	WB	NB	NB	SB	SB	SW
Directions Served	<	LTR	LTR>	LT	TR>	<LT	TR	<LR>
Maximum Queue (ft)	64	168	190	235	212	167	182	54
Average Queue (ft)	20	57	81	122	90	81	85	16
95th Queue (ft)	51	136	151	204	180	139	147	42
Link Distance (ft)	1635	1635	1376	1441	1441	312	312	1075
Upstream Blk Time (%)								
Queuing Penalty (veh)								
Storage Bay Dist (ft)								
Storage Blk Time (%)								
Queuing Penalty (veh)								

Intersection: 2: North Main Street & Patrick Henry Drive

Movement	EB	EB	WB	WB	NB	NB	NB	SB	SB	SB
Directions Served	L	TR	LT	TR	L	T	TR	L	T	TR
Maximum Queue (ft)	168	334	167	145	149	244	217	88	198	218
Average Queue (ft)	56	168	91	64	90	107	121	38	108	116
95th Queue (ft)	122	302	143	117	157	196	191	76	172	191
Link Distance (ft)	2109	2109	1615	1615		2644	2644		1930	1930
Upstream Blk Time (%)										
Queuing Penalty (veh)										
Storage Bay Dist (ft)					150			250		
Storage Blk Time (%)					3	2			0	
Queuing Penalty (veh)					6	4			0	

Intersection: 3: North Main Street & Montgomery Street/Business Driveway

Movement	EB	WB	NB	NB	SB	SB
Directions Served	LTR	LTR	LT	TR	LT	TR
Maximum Queue (ft)	46	40	81	26	34	4
Average Queue (ft)	13	15	17	1	3	0
95th Queue (ft)	33	41	55	18	18	3
Link Distance (ft)	1040	1085	312	312	254	254
Upstream Blk Time (%)						
Queuing Penalty (veh)						
Storage Bay Dist (ft)						
Storage Blk Time (%)						
Queuing Penalty (veh)						

Intersection: 4: North Main Street & YMCA Access

Movement	WB	SB
Directions Served	LR	LT
Maximum Queue (ft)	43	16
Average Queue (ft)	15	1
95th Queue (ft)	41	10
Link Distance (ft)	1032	206
Upstream Blk Time (%)		
Queuing Penalty (veh)		
Storage Bay Dist (ft)		
Storage Blk Time (%)		
Queuing Penalty (veh)		

Intersection: 5: North Main Street & Driveway/Lucas Drive

Movement	EB	WB	NB	NB	SB	SB
Directions Served	LTR	LTR	LT	TR	LT	TR
Maximum Queue (ft)	44	42	49	7	39	2
Average Queue (ft)	18	15	6	0	3	0
95th Queue (ft)	44	40	30	5	17	2
Link Distance (ft)	481	1016	206	206	2644	2644
Upstream Blk Time (%)						
Queuing Penalty (veh)						
Storage Bay Dist (ft)						
Storage Blk Time (%)						
Queuing Penalty (veh)						

Network Summary

Network wide Queuing Penalty: 9

FUTURE (2020) ‘BUILD’ CONDITIONS

Intersection: 1: North Main Street & Progress Street & McDonald Street

Movement	EB	EB	WB	NB	NB	SB	SB	SW
Directions Served	<	TR	LTR>	LT	TR>	LT	TR	<LR>
Maximum Queue (ft)	36	72	69	153	124	162	170	36
Average Queue (ft)	8	22	23	59	29	71	83	8
95th Queue (ft)	26	53	54	118	82	130	147	27
Link Distance (ft)	1635	1635	1376	1441	1441	312	312	1075
Upstream Blk Time (%)								
Queuing Penalty (veh)								
Storage Bay Dist (ft)								
Storage Blk Time (%)								
Queuing Penalty (veh)								

Intersection: 2: North Main Street & Patrick Henry Drive

Movement	EB	EB	WB	WB	NB	NB	NB	SB	SB	SB
Directions Served	L	TR	LT	TR	L	T	TR	L	T	TR
Maximum Queue (ft)	91	138	113	84	85	86	101	69	198	201
Average Queue (ft)	41	56	59	35	34	34	48	24	100	104
95th Queue (ft)	77	109	95	69	68	69	90	55	165	174
Link Distance (ft)	2109	2109	1615	1615		2650	2650		1930	1930
Upstream Blk Time (%)										
Queuing Penalty (veh)										
Storage Bay Dist (ft)					150			250		
Storage Blk Time (%)									0	
Queuing Penalty (veh)									0	

Intersection: 3: North Main Street & Montgomery Street/Business Driveway

Movement	EB	WB	NB	SB	SB
Directions Served	LTR	LTR	LT	LT	TR
Maximum Queue (ft)	49	31	76	16	8
Average Queue (ft)	21	10	13	1	0
95th Queue (ft)	40	33	47	9	6
Link Distance (ft)	474	1085	312	261	261
Upstream Blk Time (%)					
Queuing Penalty (veh)					
Storage Bay Dist (ft)					
Storage Blk Time (%)					
Queuing Penalty (veh)					

Intersection: 4: North Main Street & Site Access/YMCA Access

Movement	EB	WB	NB	SB	SB
Directions Served	R	LTR	LT	LT	TR
Maximum Queue (ft)	70	24	53	37	11
Average Queue (ft)	30	2	10	2	0
95th Queue (ft)	56	13	38	18	10
Link Distance (ft)	634	1032	261	198	198
Upstream Blk Time (%)					
Queuing Penalty (veh)					
Storage Bay Dist (ft)					
Storage Blk Time (%)					
Queuing Penalty (veh)					

Intersection: 5: North Main Street & Lucas Drive

Movement	WB	SB
Directions Served	LR	LT
Maximum Queue (ft)	39	32
Average Queue (ft)	16	2
95th Queue (ft)	41	14
Link Distance (ft)	1016	2650
Upstream Blk Time (%)		
Queuing Penalty (veh)		
Storage Bay Dist (ft)		
Storage Blk Time (%)		
Queuing Penalty (veh)		

Intersection: 6: Montgomery Street & Site Access

Movement	SB
Directions Served	LR
Maximum Queue (ft)	45
Average Queue (ft)	20
95th Queue (ft)	39
Link Distance (ft)	386
Upstream Blk Time (%)	
Queuing Penalty (veh)	
Storage Bay Dist (ft)	
Storage Blk Time (%)	
Queuing Penalty (veh)	

Network Summary

Network wide Queuing Penalty: 0

Intersection: 1: North Main Street & Progress Street & McDonald Street

Movement	EB	EB	WB	NB	NB	SB	SB	SW
Directions Served	<	LTR	LTR>	LT	TR>	<LT	TR	<LR>
Maximum Queue (ft)	81	178	162	419	400	213	222	54
Average Queue (ft)	24	57	77	210	176	113	122	15
95th Queue (ft)	63	130	139	359	335	190	199	43
Link Distance (ft)	1635	1635	1376	1441	1441	312	312	1075
Upstream Blk Time (%)								
Queuing Penalty (veh)								
Storage Bay Dist (ft)								
Storage Blk Time (%)								
Queuing Penalty (veh)								

Intersection: 2: North Main Street & Patrick Henry Drive

Movement	EB	EB	WB	WB	NB	NB	NB	SB	SB	SB
Directions Served	L	TR	LT	TR	L	T	TR	L	T	TR
Maximum Queue (ft)	156	436	182	150	149	238	221	93	213	230
Average Queue (ft)	74	196	94	64	88	108	125	36	118	128
95th Queue (ft)	136	393	152	120	152	196	199	74	186	205
Link Distance (ft)	2109	2109	1615	1615		2650	2650		1930	1930
Upstream Blk Time (%)										
Queuing Penalty (veh)										
Storage Bay Dist (ft)					150			250		
Storage Blk Time (%)					2	2			0	
Queuing Penalty (veh)					3	4			0	

Intersection: 3: North Main Street & Montgomery Street/Business Driveway

Movement	EB	WB	NB	NB	SB	SB
Directions Served	LTR	LTR	LT	TR	LT	TR
Maximum Queue (ft)	92	48	146	112	44	21
Average Queue (ft)	34	13	54	7	4	1
95th Queue (ft)	66	40	119	52	23	11
Link Distance (ft)	474	1085	312	312	261	261
Upstream Blk Time (%)						
Queuing Penalty (veh)						
Storage Bay Dist (ft)						
Storage Blk Time (%)						
Queuing Penalty (veh)						

Intersection: 4: North Main Street & Site Access/YMCA Access

Movement	EB	WB	NB	NB	SB	SB
Directions Served	R	LTR	LT	TR	LT	TR
Maximum Queue (ft)	87	47	91	15	25	21
Average Queue (ft)	38	17	25	0	1	1
95th Queue (ft)	65	44	66	3	13	7
Link Distance (ft)	634	1032	261	261	198	198
Upstream Blk Time (%)						
Queuing Penalty (veh)						
Storage Bay Dist (ft)						
Storage Blk Time (%)						
Queuing Penalty (veh)						

Intersection: 5: North Main Street & Lucas Drive

Movement	WB	SB
Directions Served	LR	LT
Maximum Queue (ft)	35	55
Average Queue (ft)	15	4
95th Queue (ft)	40	25
Link Distance (ft)	1016	2650
Upstream Blk Time (%)		
Queuing Penalty (veh)		
Storage Bay Dist (ft)		
Storage Blk Time (%)		
Queuing Penalty (veh)		

Intersection: 6: Montgomery Street & Site Access

Movement	SB
Directions Served	LR
Maximum Queue (ft)	55
Average Queue (ft)	24
95th Queue (ft)	42
Link Distance (ft)	386
Upstream Blk Time (%)	
Queuing Penalty (veh)	
Storage Bay Dist (ft)	
Storage Blk Time (%)	
Queuing Penalty (veh)	

Network Summary

Network wide Queuing Penalty: 7

RAMEY KEMP & ASSOCIATES

Charleston, SC - Charlotte, NC - Columbia, SC - Raleigh, NC - Richmond, VA - Winston-Salem, NC